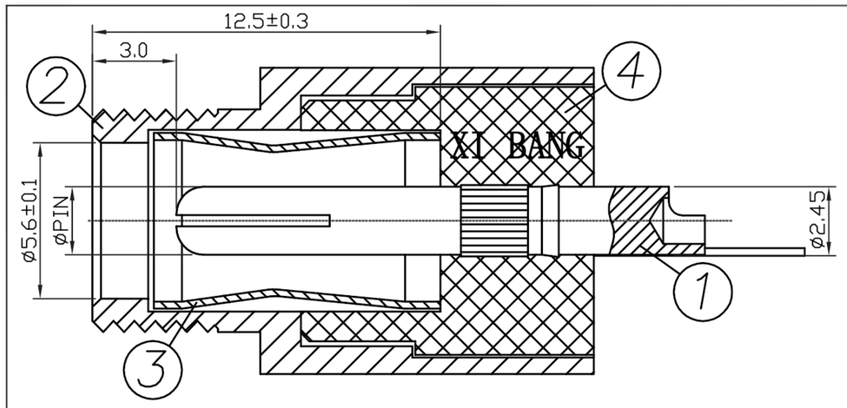

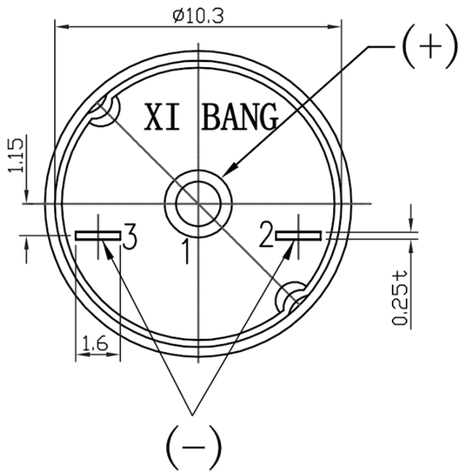

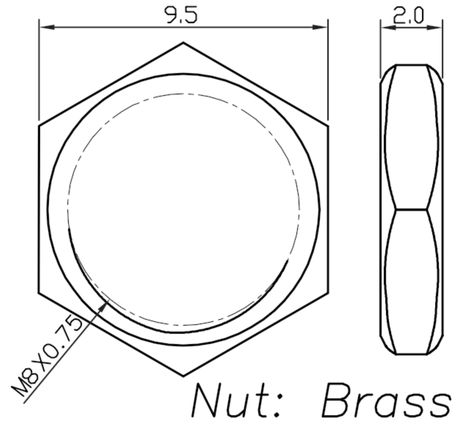

Nut: Brass

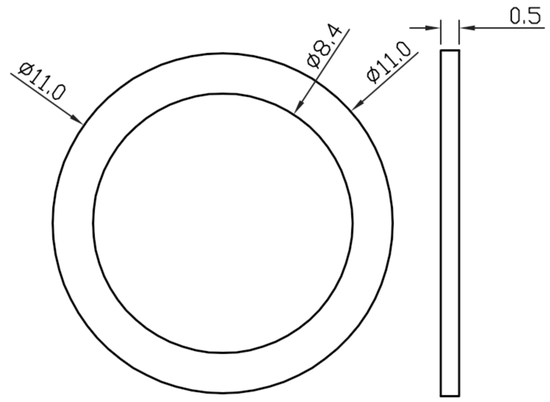

Washer:Spcc Ni Plated

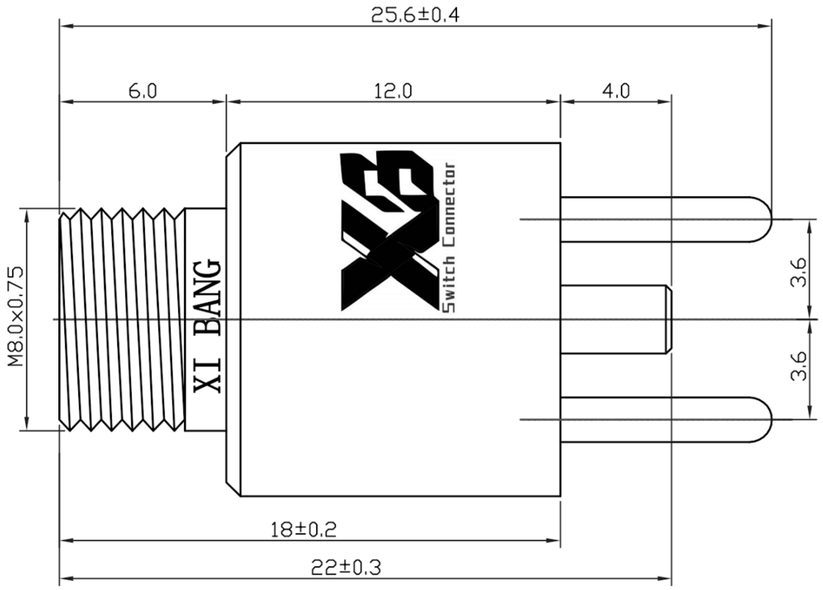

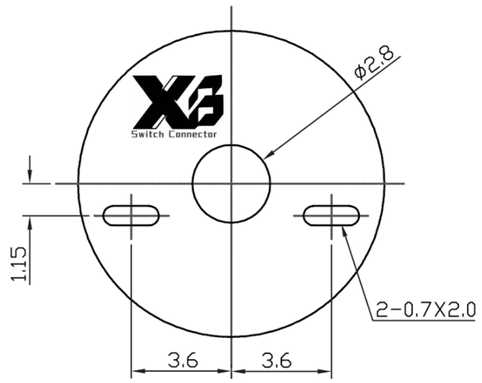

RECOMMENDED PCB LAYOUT
TOP VIEW TOLERANCE±0.05mm

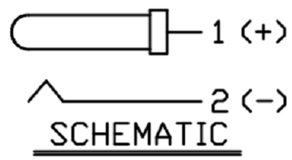

SCHEMATIC

SPECIFICATION

1.Rating ：DC 12V 30V ，5.0A 7.0A
2.Contact resistance：≤30mΩ
3.Insulation resistance：≥100MΩ
4.Withstand voltage：500VAC
5.Insertion and extraction force：3-20N
6.life test：5,000 cycles

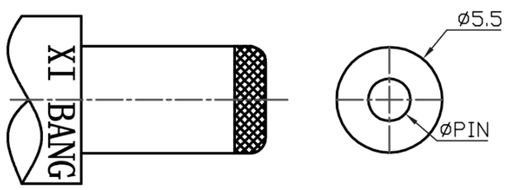

DC MATE PLUG

PIN	Φ2.1	Φ2.5
APPD		

序号	零件图代号	名 称	数量	材 料	镀层/颜色	备 注
4	XB-DC-18016-4	铜套	1PCS	H59黄铜	镀锡	环保
3	XB-DC-18016-3	内芯	1PCS	PPA	黑色	环保
2	XB-DC-18016-2	弹片	1PCS	C5191, t=0.25	镀银	环保
1	XB-DC-18016-1	PIN	1PCS	H59黄铜	镀银	环保

东莞市溪榜电子有限公司
DONG GUAN XI BANG ELECTRONICS CO.,LTD

Switch Connector

TITLE : XB DC Power Jack
MODEL : XB-DC-18016

UNIT : MM	DWN.	ZENQ. CHEN	DATE	
SCALE : 3 : 1	CHK'D	DONG. PANG	DATE	
VERSION 01	APPD.	FEI. LONG. HE	DATE	

TOLERANCE
<=1.5mm ± 0.1
> 1.5mm ± 0.2
>=10.0mm ± 0.3

ANGLE TOL
± 2°

NO.	PART NAME	MATERIAL	QTY.	FINISHING
6	PIN	BRASS	1	Ni PLATED
5	TERMINAL	BRASS STRIP t=0.3	1	Ag PLATED
4	SPRING TERMINAL C	PBS STRIP t=0.25	1	Ag PLATED
3	TERMINAL B	BRASS STRIP t=0.3	1	Ag PLATED
2	TERMINAL A	BRASS STRIP t=0.3	1	Ag PLATED
1	HOUSING	PBT UL94-V0	1	BLACK