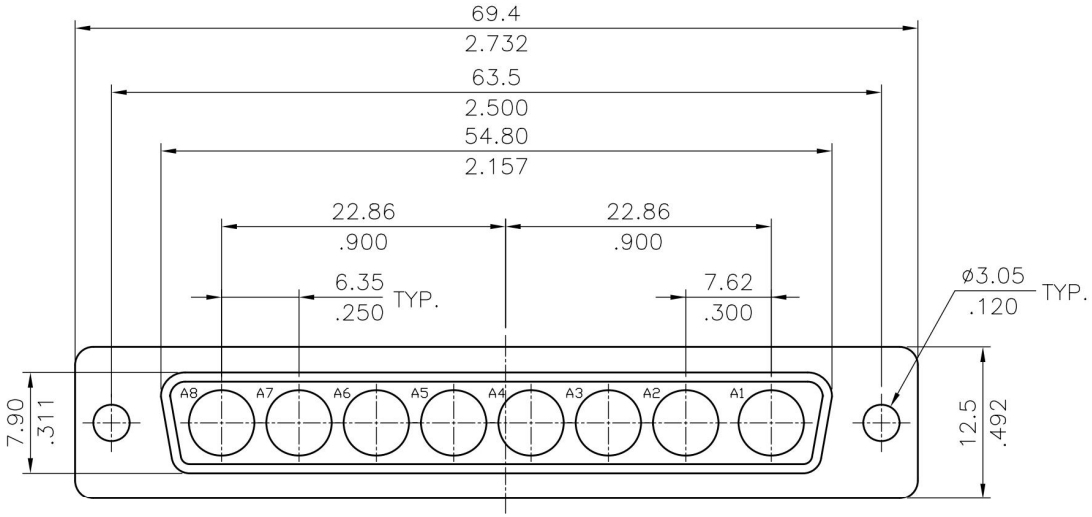


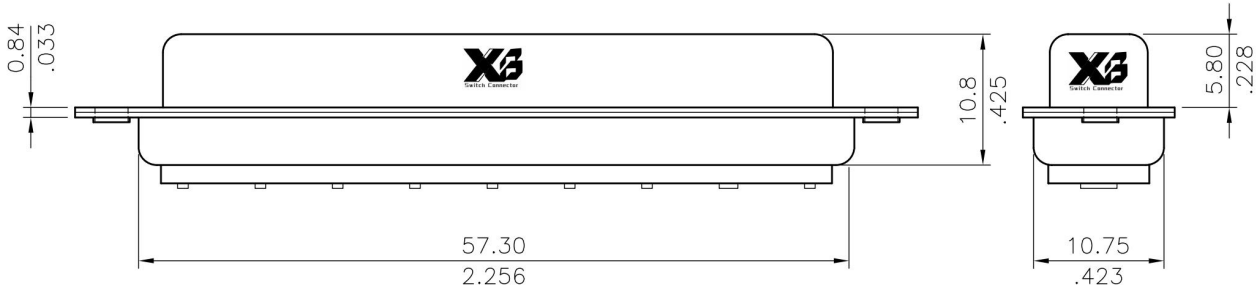


Materail:

Insulator: Glass filled Polyester UL 94V-0

Shell: Steel, Tin plated as standard

## Ordering Code

| C8W8 | S0000 | 100 | 000 |
|---|---|---|---|
| ① | ② | ③ | ④ |

① Series No.

② Connector Type:
S0000= Receptacle

③ Insulator Color:
100= Black
600= Green

④ Mounting Style:
000= With ø3.05mm holes on shell
A00= Riveted #4-40 UNC close nuts on front shell
B00= Riveted #4-40 UNC open nuts on front shell
C00= Riveted #4-40 UNC open nuts on rear shell

RoHS Compliant

### Mounting Style

| Code 000 | Code A00 | Code B00 | Code C00 |
|---|---|---|---|
| | DIM. L= 5.8mm | DIM. L= 4.0mm | DIM. L= 4.0mm |

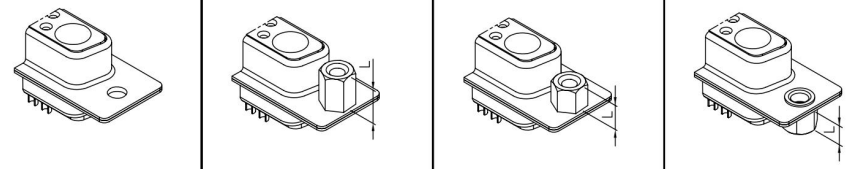

| SYM | NAME | DATE | REVISIONS |
|---|---|---|---|
| 4 | | | |
| 3 | | | |
| 2 | | | |
| 1 | | | |

| | | DATE |
|---|---|---|
| DRAWN BY: | Eisley | 10/09-01' |
| ENGINEER: | David | 10/19-01' |
| CHECKED BY: | David | 10/19-01' |
| APPROVED BY: | Alex | 10/19-01' |

UNIT: mm / inch

TOLERANCE UNLESS OTHERWISE SPECIFIED

| | |
|---|---|
| .X ± 0.30/.012 | X.° ± 1° |
| .XX ± 0.20/.008 | .X° ± |
| .XXX ± 0.10/.004 | .XX° ± |

TITLE: C8W8 FEMALE COMBO D-SUB CONNECTOR (SOLDER CUP TYPE)

MATERIAL:

FINISH:

东莞市溪榜电子有限公司
DONG GUAN XI BANG ELECTRONI CS CO., LTD.

| DRAWING NO. | C8W802SB | PART NO. | C8W8S0000*00*00 |
|---|---|---|---|
| SCALE | 2 / 1 | SHEET 1 OF 1 | |