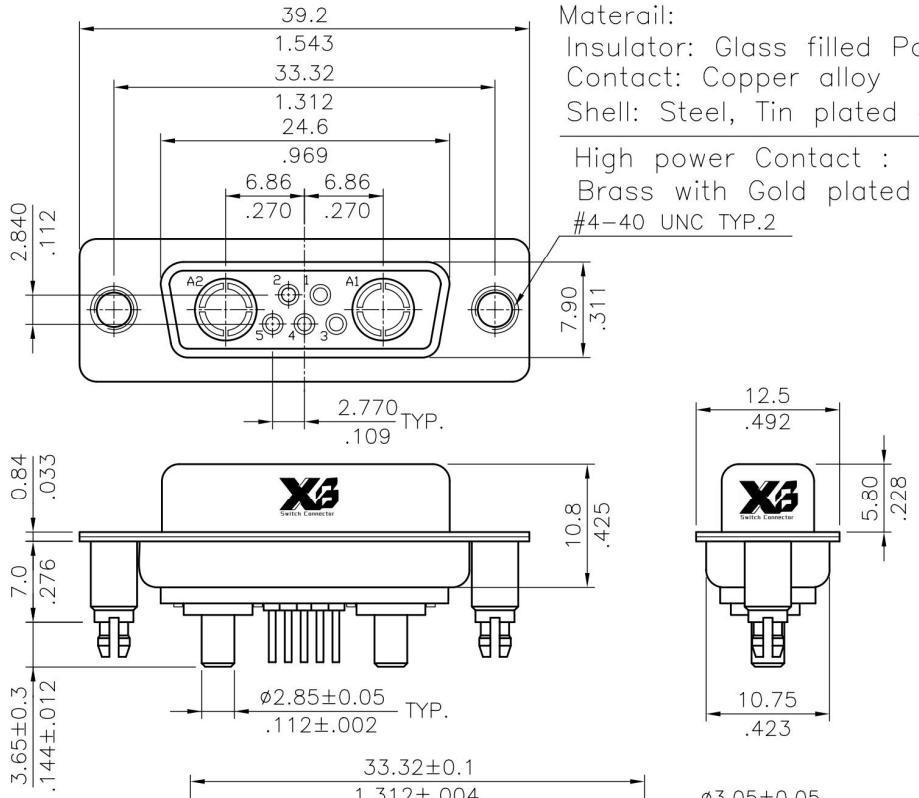

Materail:
Insulator: Glass filled Polyester UL 94V-0
Contact: Copper alloy
Shell: Steel, Tin plated as standard

High power Contact :
Brass with Gold plated
#4-40 UNC TYP.2

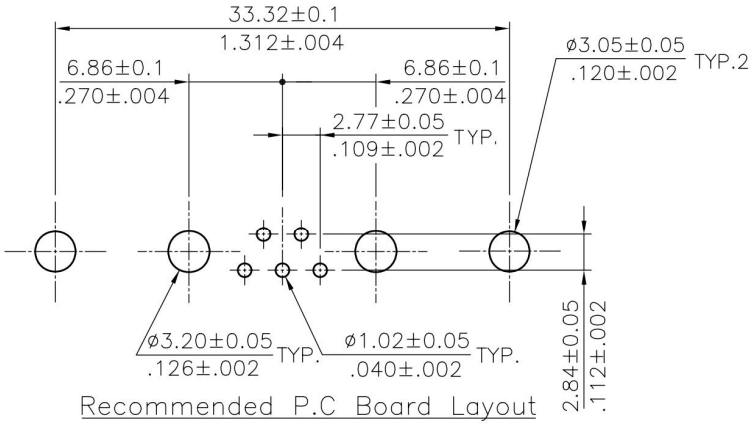

Recommended P.C Board Layout

Ordering Code

C7W2	S	P	V	3	2	1	20	D00
①	②	③	④	⑤	⑥	⑦	⑧	⑨

① Series No.
② Connector Type: S= Receptacle
③ Contact type: P= High Power Contact
④ Contact tail style: V= Straight Dip type
⑤ High power contact plating:
2= Gold flash plated over Nickel
3= 15μ" Gold plated over Nickel
4= 30μ" Gold plated over Nickel
5= 50μ" Gold plated over Nickel
⑥ Singal contact plating:
2= Gold flash plated over Nickel
3= 15μ" Gold plated over Nickel
4= 30μ" Gold plated over Nickel
⑦ Insulator color: 1= Black, 6= Green
⑧ Performance: 20= 20A
⑨ Mounting Style:
000= With ø3.05mm holes on shell
B00= Riveted #4-40 UNC open nuts on front shell
C00= Riveted #4-40 UNC open nuts on rear shell
D00= Riveted #4-40 UNC ground stand-off on rear shell(standard)

RoHS Compliant

Mounting Style

Code	000	Code	B00	Code	C00	Code	D00
	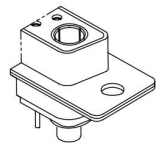	DIM. L= 4.0mm	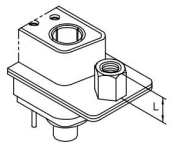	DIM. L= 4.0mm	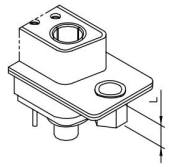	DIM. L= 7.0mm	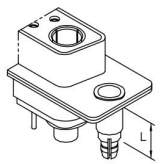

SYM	NAME	DATE	REVISIONS
4			
3			
2			
1			

		DATE
DRAWN BY:	Rita	10/18-01'
ENGINEER:	David	10/18-01'
CHECKED BY:	David	10/18-01'
APPROVED BY:	Alex	10/18-01'

UNIT: mm / inch

TOLERANCE UNLESS OTHERWISE SPECIFIED

.X ± 0.30/.012	X.° ± 1°
.XX ± 0.20/.008	.X° ±
.XXX ± 0.10/.004	.XX° ±

TITLE: C7W2 20A HIGH POWER FEMALE D-SUB CONNECTOR (TOP ENTRY BOARD MOUNT TYPE)

MATERIAL:

FINISH:

东莞市溪榜电子有限公司
DONG GUAN XI BANG ELECTRONI CS CO., LTD.

DRAWING NO.	C7W208SB	PART NO.	C7W2SPV***20*00
SCALE	2 / 1	SHEET 1 OF 1	