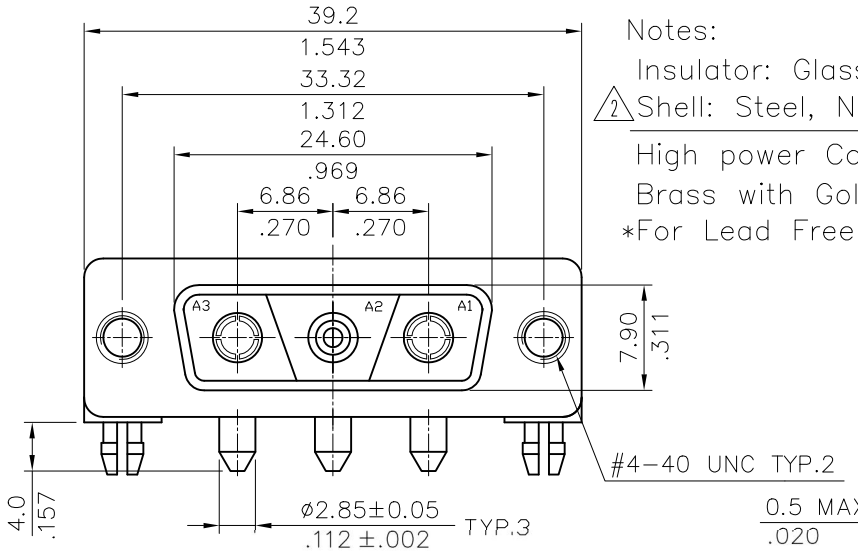

Notes:

Insulator: Glass filled Polyester UL 94V-0

2 Shell: Steel, Nickel plated as standard

High power Contact :

Brass with Gold plated

*For Lead Free Wave Flow Process

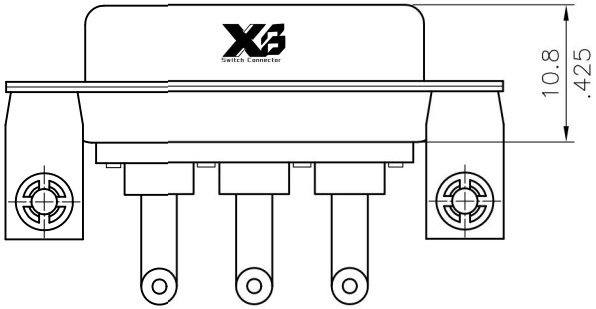

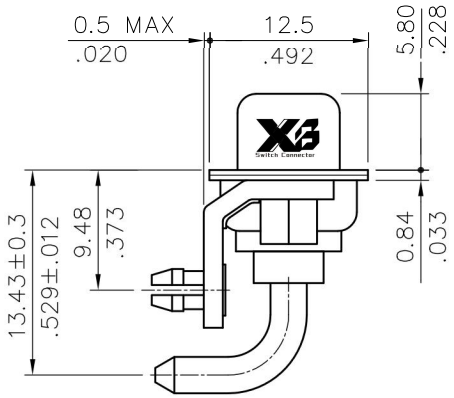

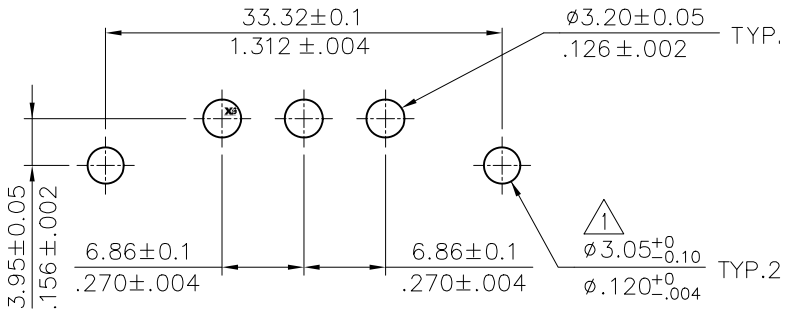

Recommended P.C Board Layout

Ordering Code

3W3C	S	P	H	3	0	1	20	I10
①	②	③	④	⑤	⑥	⑦	⑧	⑨

① Series No.

② Connector Type:
S= Receptacle (2 Female + 1 Male Contacts)

③ Contact type: P= High Power Contact

④ Contact tail style: H= Right Angle Dip type

⑤ High power contact plating:
2= Gold flash plated over Nickel
3= 15μ" Gold plated over Nickel
4= 30μ" Gold plated over Nickel
5= 50μ" Gold plated over Nickel

⑥ Signal contact plating:
0= Without singal contact

⑦ Insulator color: 1= Black, 6= Green

⑧ Performance: 20= 20A

⑨ Mounting Style:
000= With ø3.05mm holes on shell
B00= Riveted #4-40 UNC open nuts on front shell
C00= Riveted #4-40 UNC open nuts on rear shell
I00= Riveted #4-40 UNC ground tabs with ø3.2mm holes
I10= Riveted #4-40 UNC ground tabs with board locks(standard)

Lead Free Process

RoHS Compliant

Mounting Style

Code 000	Code B00	Code C00	Code I00	Code I10
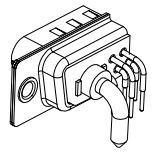	DIM. L= 4.0mm 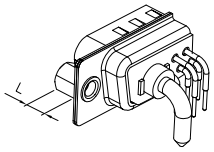	DIM. L= 4.0mm 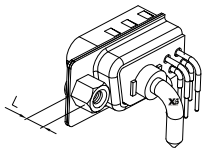	ØA=3.2mm 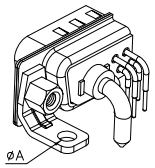	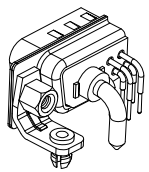

SYM	NAME	DATE	REVISIONS
4			
3			
2	Karen	1/17-18'	ECNT117262/ECRT117074
1	Karen	4/07-17'	ECNT117049/ECRT117003

		DATE
DRAWN BY:	Karen	1/17-18'
ENGINEER:	Sun	1/23-18'
CHECKED BY:	Eisley	1/25-18'
APPROVED BY:	Eisley	1/25-18'

UNIT: mm / inch

TOLERANCE UNLESS OTHERWISE SPECIFIED

.X ± 0.30/.012	X.° ± 1°
.XX ± 0.20/.008	.X° ±
.XXX ± 0.10/.004	.XX° ±

TITLE: 3W3C 20A HIGH POWER D-SUB CONNECTOR(RIGHT ANGLE BOARD MOUNT TYPE)

MATERIAL:

FINISH:

东莞市溪榜电子有限公司
DONG GUAN XI BANG ELECTRONICS CO., LTD

DRAWING NO.	3W3C20SC	PART NO.	3W3CSPH*0*20***
SCALE	2 / 1	SHEET 1 OF 1	