Materail:

Insulator: Glass filled Polyester UL 94V-0
Color Black or Green

1 Shell: Steel, Nickel plated as standard

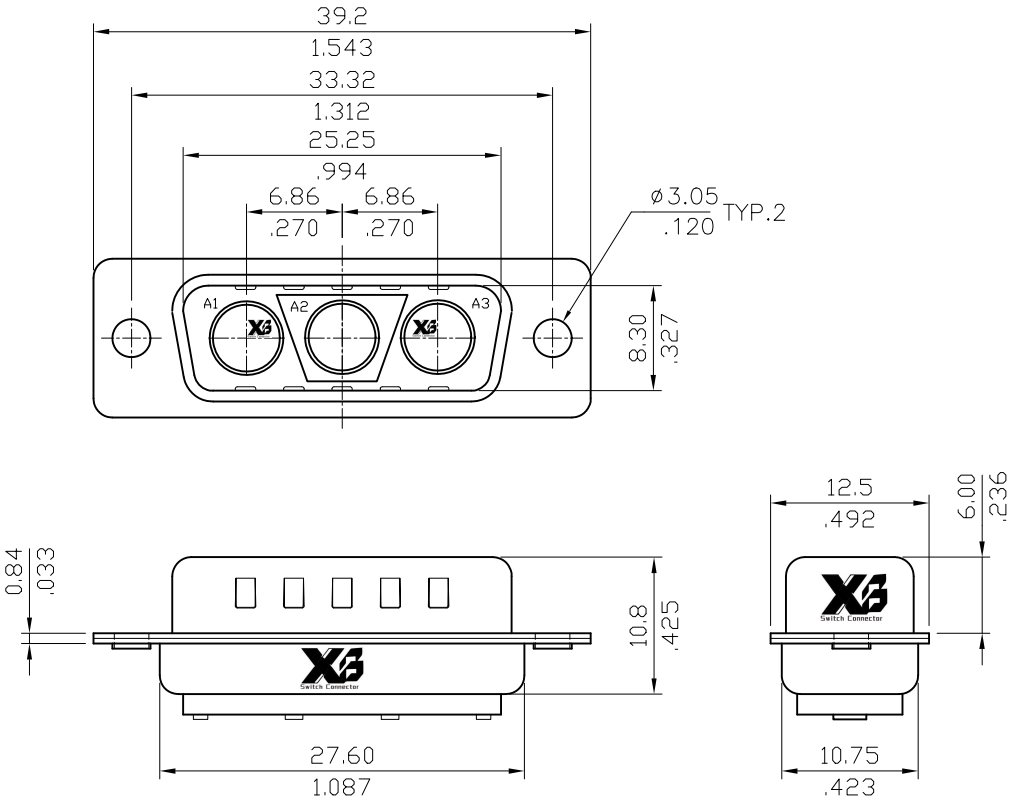

Ordering Code

3W3C	P0000	100	000
①	②	③	④

① Series No.
② Connector Type:
P0000=Plug
③ Insulator Color:
100=Black
600=Green
④ Mounting Style:
000=With ø3.05mm holes on shell
A00= Riveted #4-40 UNC close nuts on front shell
B00= Riveted #4-40 UNC open nuts on front shell
C00= Riveted #4-40 UNC open nuts on rear shell

Mounting Style

Code	000	Code	A00	Code	B00	Code	C00
		DIM. L= 5.8mm		DIM. L= 4.0mm		DIM. L= 4.0mm	

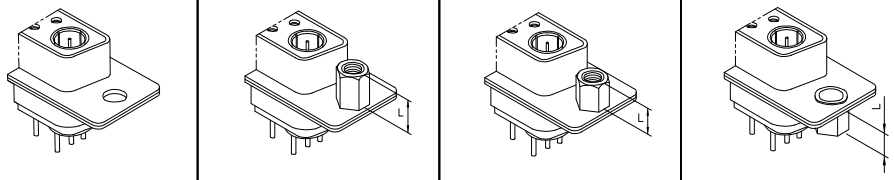

SYM	NAME	DATE	REVISIONS
4			
3			
2			
1	Karen	1/16-18'	ECNT117262/ECRT117074

		DATE
DRAWN BY:	Karen	1/17-18'
ENGINEER:	Sun	1/17-18'
CHECKED BY:	Eisley	1/19-18'
APPROVED BY:	Eisley	1/19-18'

UNIT: mm / inch

TOLERANCE UNLESS OTHERWISE SPECIFIED

.X ± 0.30/.012	X.° ± 1°
.XX ± 0.20/.008	.X° ±
.XXX ± 0.10/.004	.XX° ±

TITLE: 3W3C MALE COMBO D-SUB CONNECTOR (SOLDER CUP TYPE)

MATERIAL:

FINISH:

东莞市溪榜电子有限公司
DONG GUAN XI BANG ELECTRONICS CO., LTD

DRAWING NO.	3W3C01SC	PART NO.	3W3CP0000*00*00
SCALE	2 / 1	SHEET 1 OF 1	