ROHS

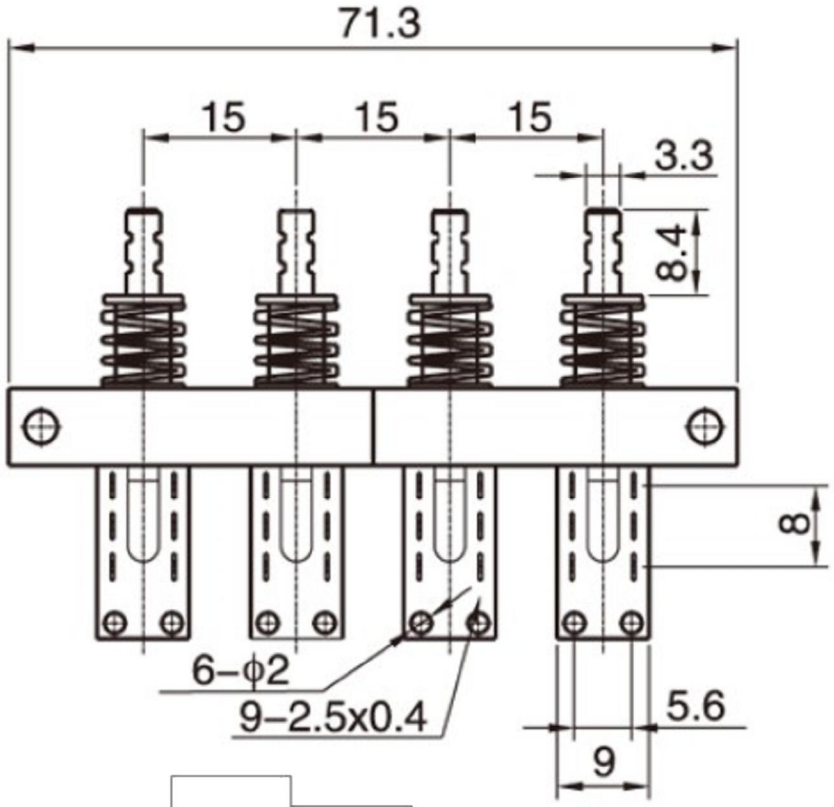

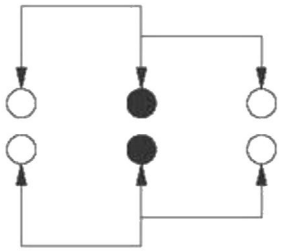

SCHEMATIC

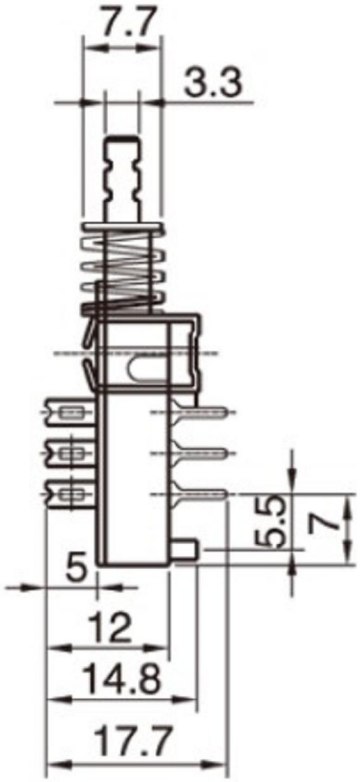

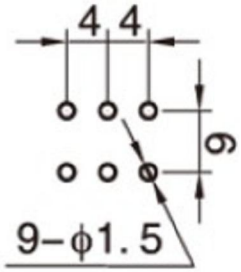

PCB LAYOUT

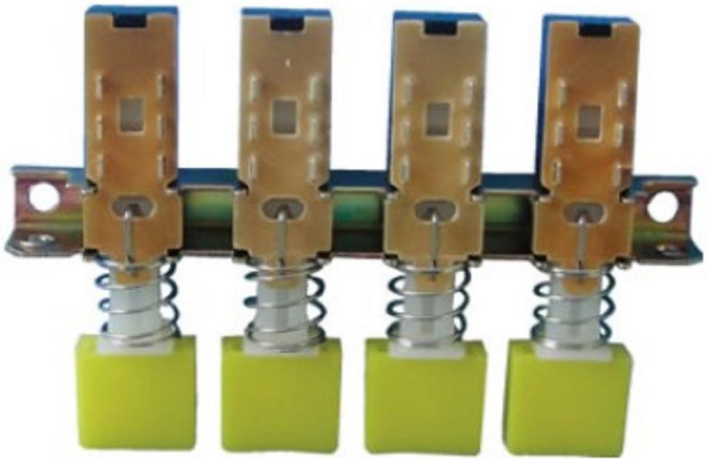

ITEM: PERFORMANCE
Title: PUSH BUTTOMN SWICH
Model: XB-PBS-2H4-15
Rating: 0.3A 0.5A 12V 30V DC
Function: 2P2T 互动按钮开关四位
Timing:Non-shorting
ContactResistance(mohms):50mΩ max
Insulation Resistanc(Mohms):100MΩ min at 500V DC
Dielectric Strength(V):AC 500V for 1 min
LifeTest:10,000 Cycles

Switch Connector

东莞市溪榜电子有限公司
DONG GUAN XI BANG ELECTRONICS CO.,LTD

TITLE : XB PUHS BUTTON SWITCH

MODEL : XB-PBS-2H4-15 4联琴键开关 油烟机按钮开关互动四位

UNIT : MM		DWN.	ZENQ. CHEN	DATE	2024-05-08
SCALE : 3 : 1		CHK'D	PANG. DONG	DATE	2024-05-08
VERSION	01	APPD.	FEI. LONG. HE	DATE	2024-05-08

TOLERANCE	ANGLE
<=1.5mm ±0.1	±2°
>1.5mm ±0.2	
>=10mm ±0.3	

NO.	PART NAME	MATERIAL	QTY.	FINISHING
8	CONTACT CLIP	PBS STRIP	2	Ag CLAD
7	RING	IRON STRIP	1	Zn PLATED
6	SPRING	SUS	1	NATURE
5	SLEEVE	POM	1	GRAY
4	CASE	NYLON	1	GRAY
3	COVER	PBT	1	GRAY
2	TERMINAL	BRASS STRIP	6	Ag PLATED
1	KNOB	POM	1	YELLOW