ROHS

DIMENSIONS

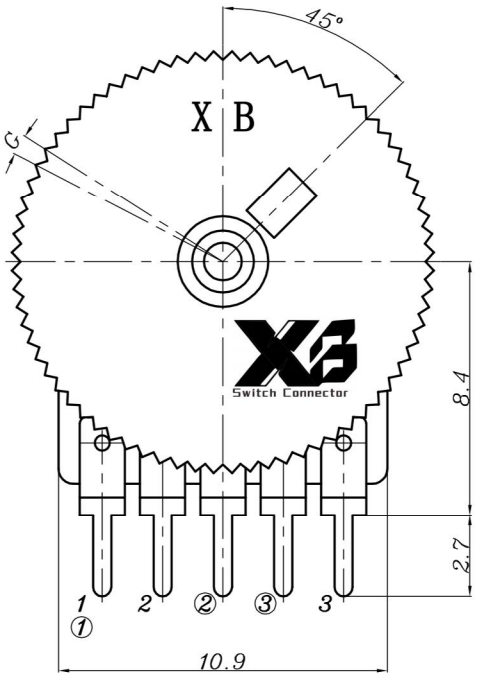

KNOB SHOWN IN FULL C.C.W. POSITION

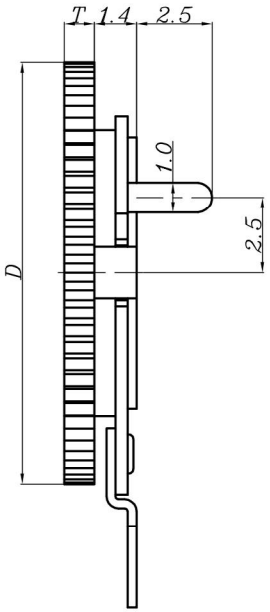

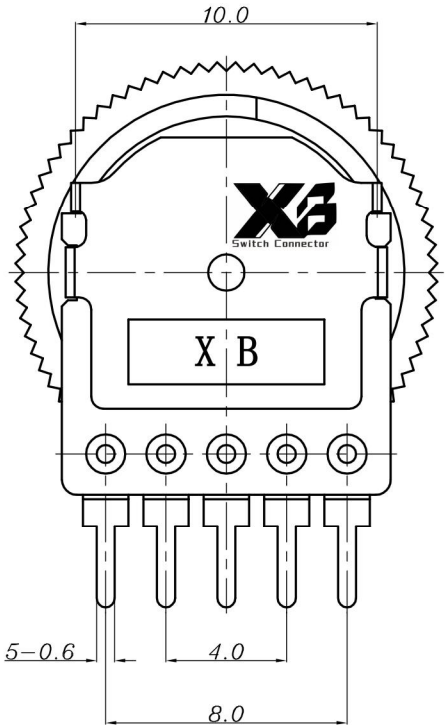

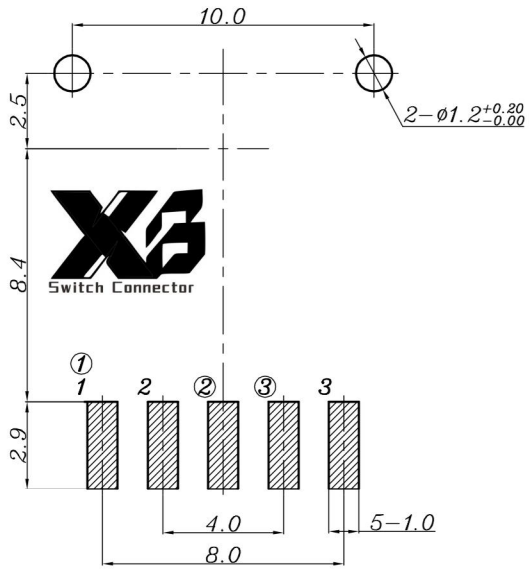

P.C.B. MOUNTING HOLE DETAIL

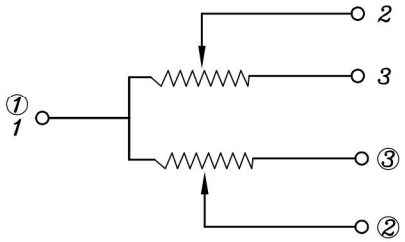

CIRCUIT: GA

SPECIFICATION (INITIAL)
RATING: DC 5V 0.5mA 10mA
ANGLE: FULL ROTATION ANGLE: 360 DEGREES
CONTACT RESIS TANCE: 100mΩ max
INSULATION RESISTANCE: 100MΩ DC 250V 1mA
WITHSTAND VOLTAGE: 300V AC/min or
OPERATION FORCE: 6±3N 600gf±300gf
SWITCHING LIFE: 20,000 cycles

XX	14/0.8	14/1	14/2	14/2.8	16/1	16/2	16/2.8	18/1	18/2	18/2.8	14/0.9	
D	ø14.0	ø14.0	ø14.0	ø14.0	ø16.0	ø16.0	ø16.0	ø18.0	ø18.0	ø18.0	ø14.0	
T	0.8	1.0	2.0	2.8	1.0	2.0	2.8	1.0	2.0	2.8	0.9	
G	72−5°	72−5°	72−5°	72−5°	72−5°	72−5°	72−5°	72−5°	72−5°	72−5°	72−5°	

ITEM NO.	DESCRIPTION	DRAWN	DATE
2	公差及料號更新	Jack	072313
1	圖面更新	Frank Wu	021012

东莞市溪榜电子有限公司
DONG GUAN XI BANG ELECTRONICS CO., LTD

TOLERANCE UNLESS OTHERWISE STATED: Up to 5 ±0.2; Above 5 ~ 15 ±0.3; Above 15 ~ 30 ±0.4; Above 30 ~ 50 ±0.5; Angle ±0.3°

3RD. ANGEL'S

UNITS MM

DRAWN BY: GAO PENG	DATE 07/23/13	MAT'L	
CHECKED BY: PANG DONG	DATE 07/23/13	FINISH	
APPROVED BY: HE. LONG. FEI	DATE 07/23/13	SCALE 1 : 1	SHEET NO. 1 of 1

TITLE	ENCODER		
MODLE	ENCODER W/I SWITCH		
DWG NO.	XB-RV-1011	SIZE	A4
PART NO.		VER	R2