ROHS

DIMENSIONS

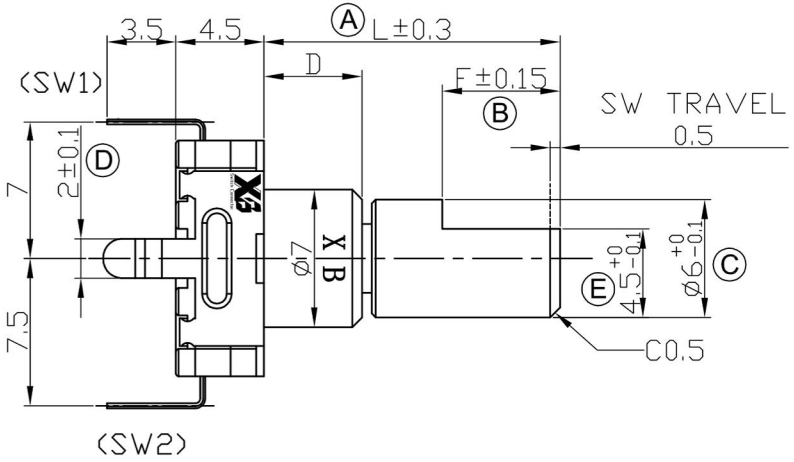

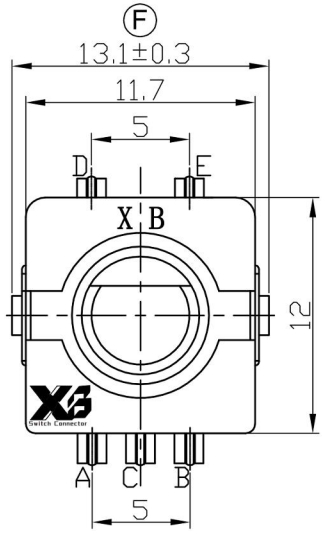

(SW02)CIRCUIT DIAGRAM

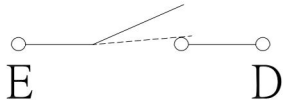

(SW1)迴路图
SWITCH CIRCUIT

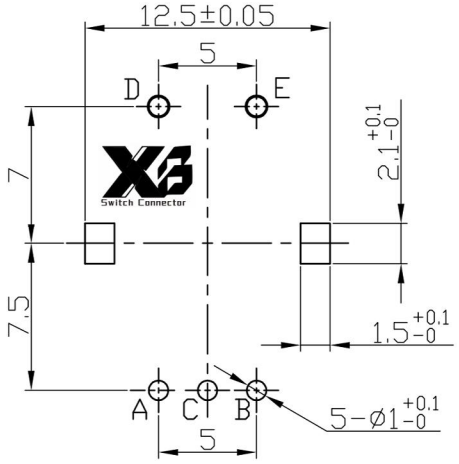

P.C.B MOUNTING HOLE DETAIL

(SW01) ENCODER
(SW02) PUSH ON SW

CLICK Position

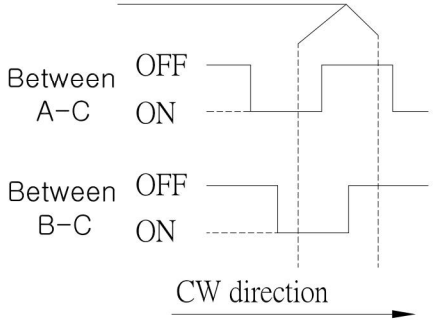

(SW01) OUTPUT

L	8
F	3

X		
2	D=5.0	
4	D=7.0	
8	D=3.5	✓

SPECIFICATION (INITIAL)
RATING: DC 5V 0.5mA 10mA
ANGLE: FULL ROTATION ANGLE: 360 DEGREES
CONTACT RESIS TANCE: 100mΩ max
INSULATION RESISTANCE: 100MΩ DC 250V 1mA
WITHSTAND VOLTAGE: 300V AC/min or
OPERATION FORCE: 6±3N 600gf±300gf
SWITCHING LIFE: 20,000 cycles

ITEM NO.	DESCRIPTION	DRAWN	DATE
2	公差及料號更新	Jack	072313
1	圖面更新	Frank Wu	021012

东莞市溪榜电子有限公司
Switch Connector DONG GUAN XI BANG ELECTRONICS CO., LTD

TOLERANCE UNLESS OTHERWISE STATED: Up to 5 ±0.2; Above 5 ~ 15 ±0.3; Above 15 ~ 30 ±0.4; Above 30 ~ 50 ±0.5; Angle ±0.3°

3RD. ANGEL'S | UNITS MM

DRAWN BY: GAO PENG	DATE 07/23/13	MAT'L		TITLE	ENCODER		
CHECKED BY: PANG DONG	DATE 07/23/13	FINISH		MODLE	ENCODER W/I SWITCH		
APPROVED BY: HE. LONG. FEI	DATE 07/23/13	SCALE	1 : 1	DWG NO.	XB-EC-11E15-14	SIZE	A4
		SHEET NO.	1 of 1	PART NO.		VER	R2