RoHS Compliant

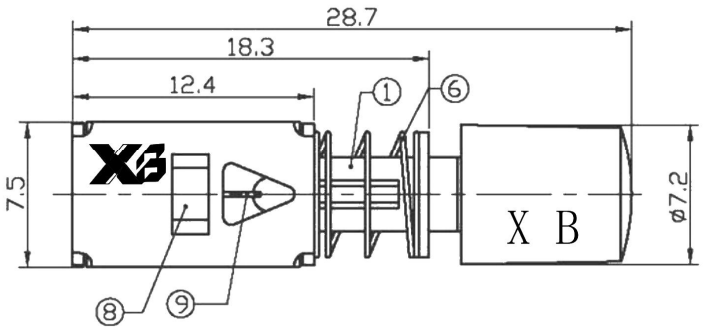

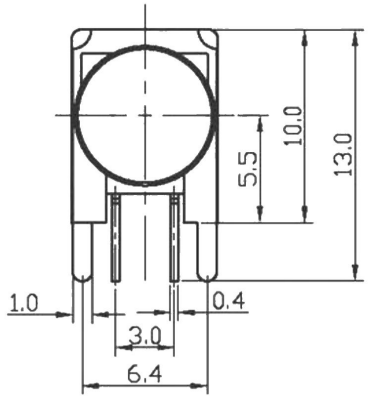

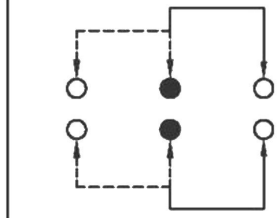

SCHEMATIC
(NON-SHORTING)

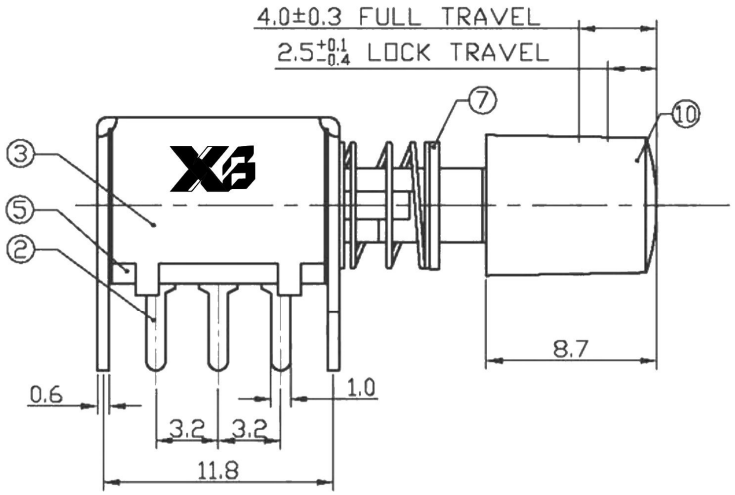

NO.	PART NAME	MATERIAL	QTY.	FINISHING
10	SLEEVE	ABS	1	WHITE
9	LOCK NEEDLE	STEEL WIRE	1	Ni PLATED
8	BLOCK	PBS STRIP	1	NATURE
7	SPRING PLATE	IRON STRIP	1	Ni PLATED
6	SPRING	STEEL WIRE	1	Ni PLATED
5	BOARD	PHENOLIC RESIN	1	NATURE
4	CONTACT CLIP	PBS STRIP	2	Ag PLATED
3	FRAME	IRON STRIP	1	Ni PLATED
2	TERMINAL	BRASS STRIP	6	Ag PLATED
1	KNOB	POM	1	BLUE

Switch Connector

东莞市溪榜电子有限公司
DONG GUAN XI BANG ELECTRONICS CO.,LTD

TITLE : PUSH SWITCH

MODEL : PS22F51-TCI

UNIT : MM		DWN.		DATE	
SCALE : 3 : 1		CHK'D		DATE	
VERSION	01	APPD.		DATE	

TOLERANCE
<=1.5mm ± 0.1
> 1.5mm ± 0.2
>=10.0mm ± 0.3

ANGLE TOL
± 2°