Unit: mm

ROHS

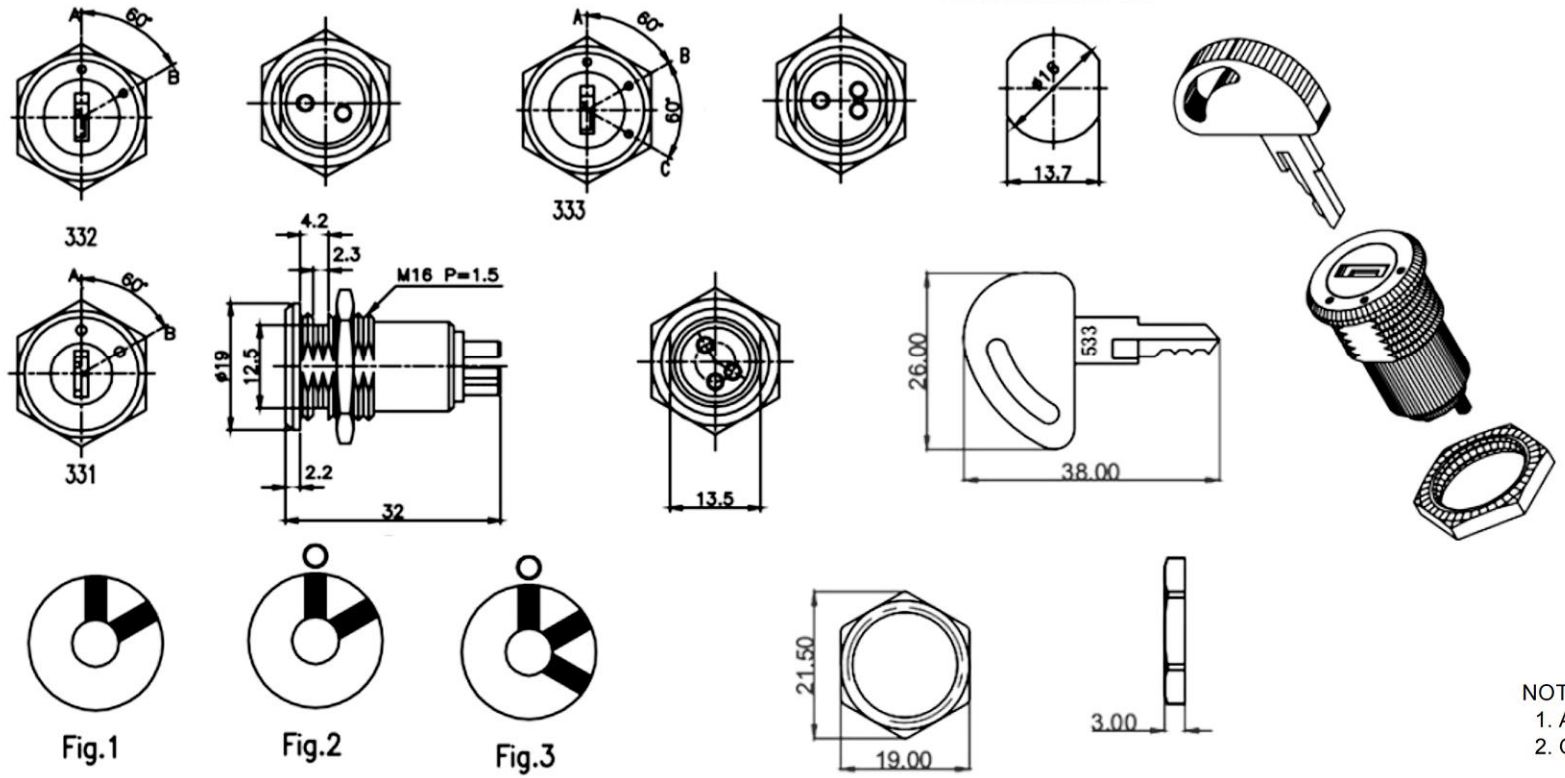

▲

SWITCH FUNCTION	
POS. 1	POS. 2
ON	ON
1-3	1-2

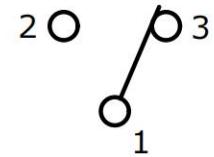

▲ SPDT ON-ON
CONTACT CONFIGURATION

Fig No	Lock Number	Pole	Positions	Terminals	Key Pulls	Turn	↑	↗	↖	Type
1	S331	1	2	3	2	60°	On	On		SPDT
2	S332	1	2	2	2	60°	Off	On		SPST
3	S333	1	3	3	3	120°	Off	On	On	SPDT

Zinc alloy die cast housing and nylon cylinder.
Bright chrome plated standard.
3 disc tumbler mechanism.
Brass keys, nickel plated, with plastic cover.
Silver plated contacts and terminals.
S331 2 position (on-on) 60 index 3 terminals.
S332 2 position (off-on) 60 index 2 terminals.
S333 3 position (off-on-on) 60 index 3 terminals.
Hex nut or speed clip mounted.

NOTE:
1. ALL DIMENSIONS IN mm [INCH]
2. GENERAL TOLERANCE: X.X = ±0.4
   X.XX = ±0.25
3. TERMINAL NUMBERS FOR REF ONLY
▲ 4. CONTACT MATERIAL: SILVER
5. RATING: 2A 24VDC
6. ELECTRIC LIFE: 50,000 MAKE-AND-BREAK CYCLES AT FULL LOAD.
7. INSULATION RESISTANCE: 1,000 MΩ MIN.
8. DIELECTRIC STRENGTH: 1,500 VAC MIN. FOR 1 MINUTE
9. CONTACT RESISTANCE: 50mΩ MAX. @ 1A 12VDC
10. OPERATING TEMP.: -20°C to 55°C
11. ▲ DENOTES CRITICAL PARAMETER.
▲ 12. INGRESS PROTECTION: IP40
▲ 13. HARDWARE SUPPLIED: KEY, O-RING, AND HEXNUT

The material contained in this drawing is the property of XiBang. Any use other than that speclfically authorized by XiBang i5 prohibited. The above drawing IS subjected to change for improvement without prior notice.

Switch Connector

东莞市溪榜电子有限公司
DONG GUAN XI BANG ELECTRONICS CO.,LTD

TITLE : XB KEY SWITCH ELECTRONIC LOCK

MODEL : XB-S-332-1

UNIT : MM	DWN.	ZENQ. CHEN	DATE	
SCALE : 3 : 1	CHK'D	PENG. GAO	DATE	
VERSION 01	APPD.	FEI. LONG. HE	DATE	

TOLERANCE	ANGLE
<=1.5mm±0.1 > 1.5mm±0.2 >=10mm±0.3	±2°

NO.	PART NAME	MATERIAL	QTY.	FINISHING
7	SPRING	STEEL WIRE	1	NATURE
6	STEEL BALL	STEEL	1	NATURE
5	BOARD	PHENOLIC RESIN	1	NATURE
4	CONTACT CLIP	PBS STRIP	2	Ag PLATED
3	FRAME	IRON STRIP	1	Ni PLATED
2	TERMINAL	BRASS STRIP	8	Ag PLATED
1	KNOB	POM	1	BLACK