Product NO.	XB-801-0051			
REV	DESCRIPTION	DWN	DATE	APPROVEN
A	First issue	JIM	2012/11/02	John kine

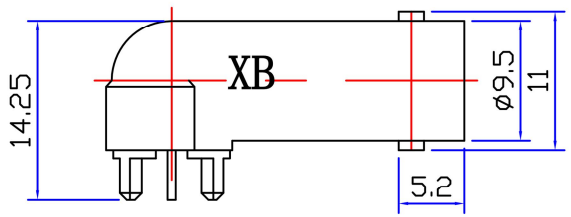

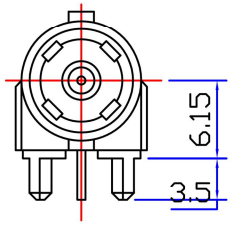

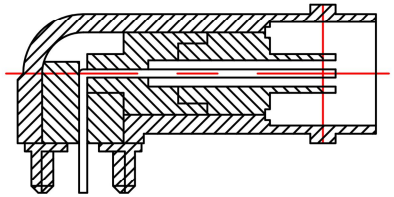

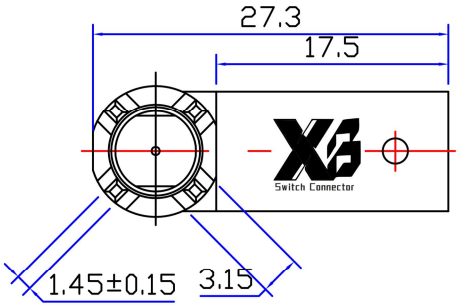

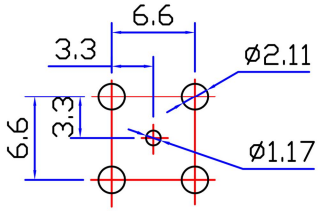

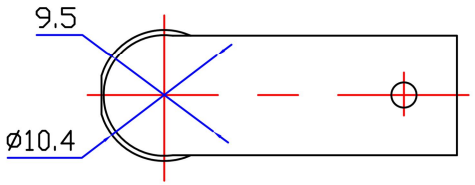

PCB HOLE CONFIGURATION
RECOMMENDED PANEL CUTOUTS

Specifications

Impedance:75 Ohms
Frequency Range:DC~3G
VSWR:1.3MAX
Working Voltage:500V rms @ sea level
Insulation Resistance:5000 Ohms min
Temperature Range:-55℃ TO +155℃
Relative Temperature:≤95%(40° C±2° C)
Drawings products are in line with ROHS standards

NO	DESCRIPTION	MATERIAL	FINISH	QTY
3	BODY	ZINC	NICKEL	1
2	INSULATOR	POM	WHITE	1
1	PIN	BRASS	GOLD	1

NOTE:

DRAWN Zelin.Zhang	2012/11/10	Tolerance	0-6 ±0.15 6-30 ±0.20 30-120 ±0.5 Angular ±2°
CHECKED		View	
APPROVALS John King	12/04.2012	UNIT	MM
		SCALE	1:1

东莞市溪榜电子有限公司
Switch Connector DONG GUAN XI BANG ELECTRONICS CO.,LTD

Name: BNC CONNECTOR DNN		
SIZE A	Product NO. XB-801-0051	REV B
DateTime 2012/11/02	CAD FILE D/company drawings/BD	SHEET: 1 OF 1