IPX7

RoHS Compliant

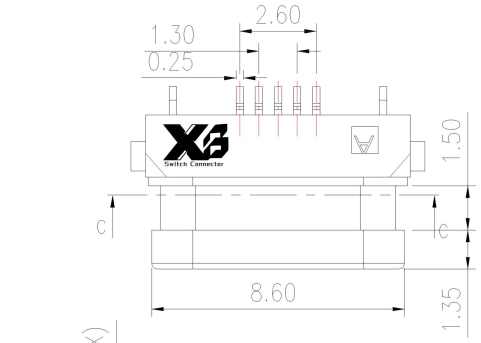

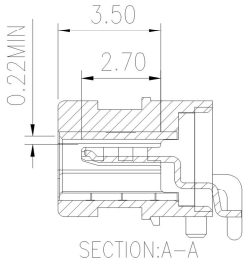

SECTION:A–A

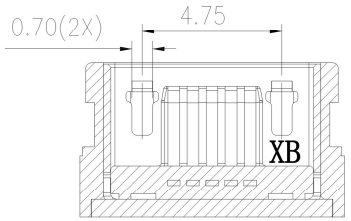

SECTION:B–B

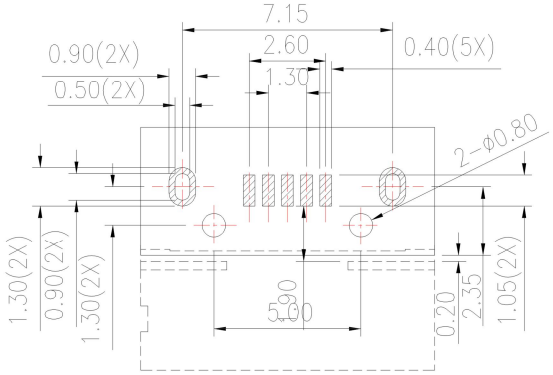

P.C.B LAYOUT MOUNTING PATTERN

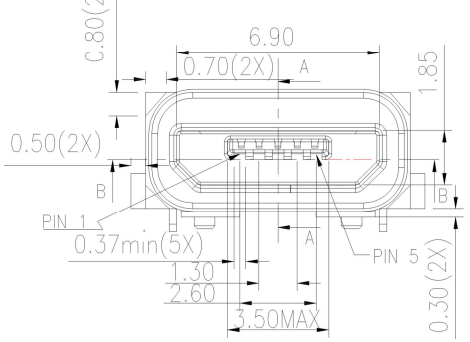

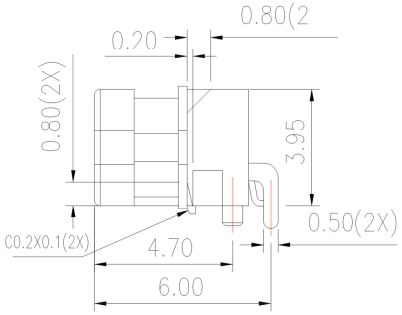

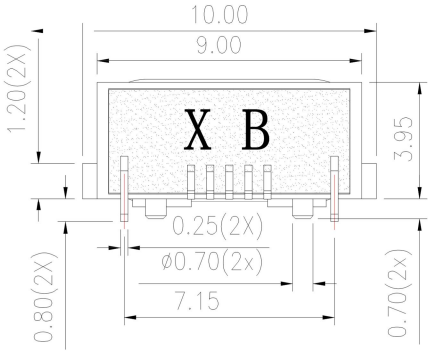

MRUSB-5B-WP17-x-S404

鍍層厚度：

Blank : 1u"
2 : 15u"
3 : 30u"

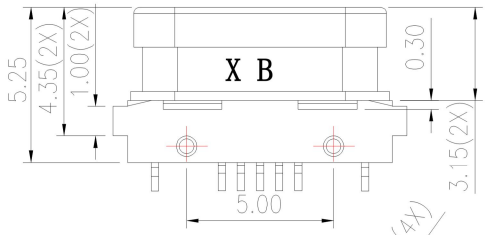

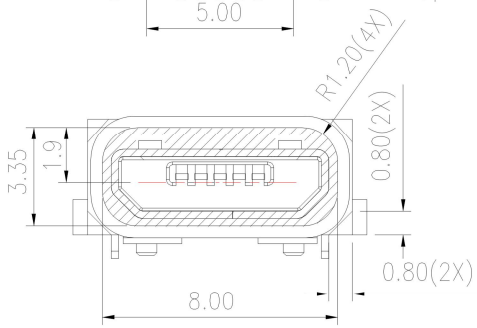

SECTION:C–C

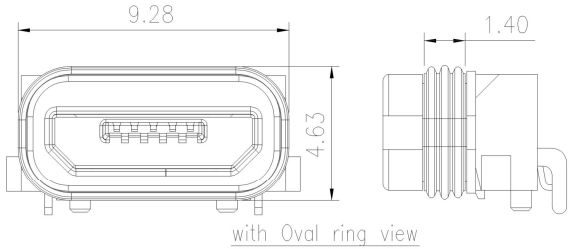

with Oval ring view

搭配:PT-ORING-13-S404

NOTES:

MATERIAL:

1.1 HOUSING: PA9T

1.2 CONTACT: COPPER ALLOY

1.3 SHELL: SUS

FINISH:

2.1 CONTACT: PLATED GOLD IN MATING AREA ;
TIN PLATED ON SOLDER BALLS ;
NICKEL UNDER PLATED OVERALL

2.2 SHELL: NICKEL UNDER PLATED SURFACE LAYER

3.SPECIFICATION:

3.1 RATING: 1.8A(PIN1&5) , 0.5A(PIN2&3&4)

3.2 DIELECTRIC WITHSSTANDING VOLTAGE: 300 VAC

3.3 CONTACT RESISTANCE: 30 mΩ MAX.

3.4 INSULATION RESISTANCE: 100 MΩ MIN.

ITEM NO.	DESCRIPTION	DRAWN	DATE

东莞市溪榜电子有限公司
DONG GUAN XI BANG ELECTRONI CS CO., LTD.

TOLERANCE UNLESS OTHERWISE STATED :		
Up to 5	±0.2	
Above 5 ~ 15	±0.3	
Above 15 ~ 30	±0.4	
Above 30 ~ 50	±0.5	
Angle	±0.3°	

3RD. ANGEL'S | UNITS | MM

DRAWN BY: Jack Lu	DATE 07/22/20	MAT'L		TITLE	CONNECTOR		
CHECKED BY: Jacky Chen	DATE 07/22/20	FINISH		MODLE	MICRO USB 5PF B TYPE H 3.95 防水型 IPX7		
APPROVED BY: Tony Kao	DATE 07/22/20	SCALE	1 : 1	DWG NO.	MRUSB-5B-WP17-x-S404	SIZE	A4
		SHEET NO.	1 of 2	PART NO.	MRUSB-5B-WP17-x-S404	VER	R