RoHS Compliant

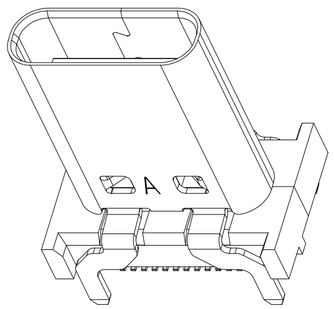

WITHOUT COVER

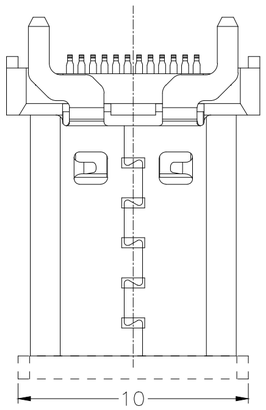

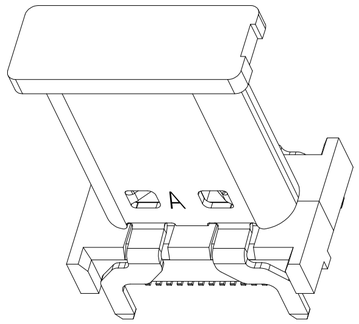

WITH COVER

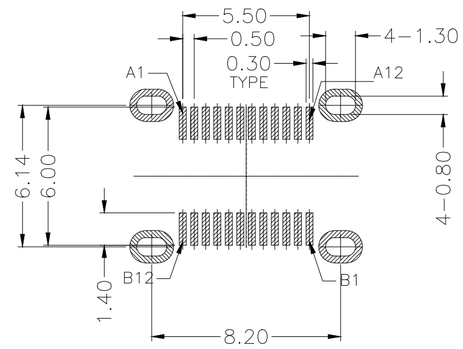

RECOMMEND P.C.B LAYOUT(COMPONENT SIDE)

TOLERANCE FOR PCB LAYOUT IS ± 0.05

KEEP OUT AREA

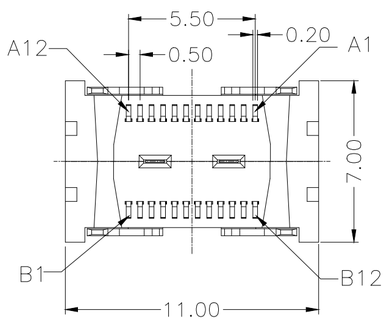

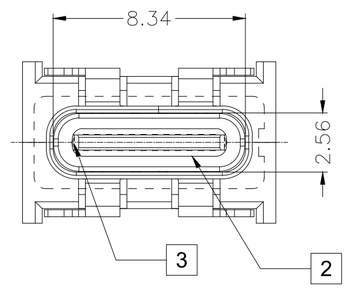

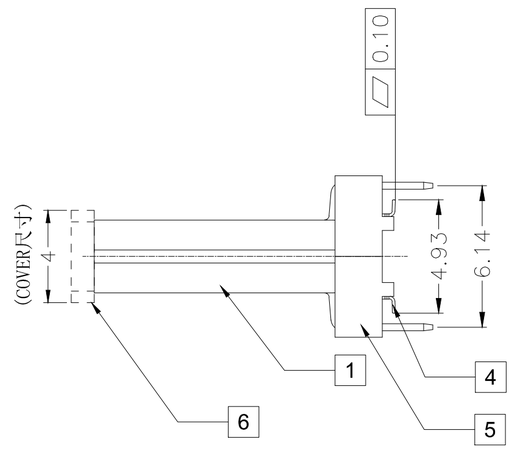

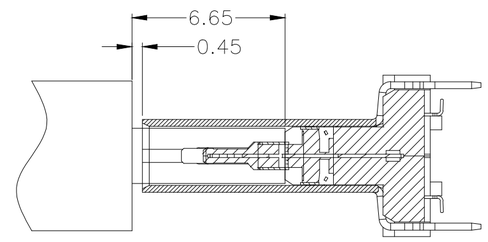

AFTER MATING

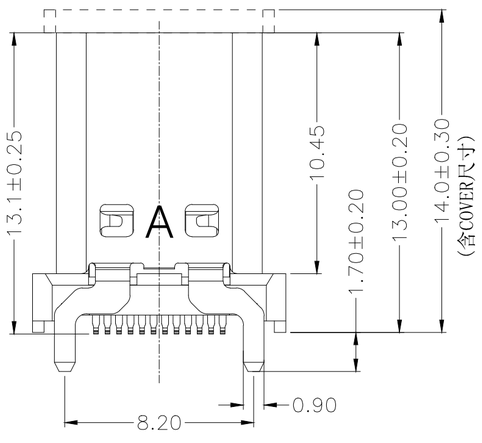

1.Contact Resistance:40mOHM Max.;
2.Dielectric Withstanding Voltage:100V AC For 1 Minute;
3.Insulation Resistance:100M OHM Min.;
4.Mating And Unmating Force:
Mating Force: 5~20N
Unmating Force: 8~20N;
6~20N AFTER TEST;
5.Durability:10000 Cycles;

Item	Title	Material	Dispose	Q'TY
1	Shell	Stainless Steel	Ni:30u" Min.	1PCS
2	GND Plate	Stainless Steel		2PCS
3	Mid Plate	Stainless Steel		1PCS
4	Contact	Copper Alloy	Mating Area: See P/N Solder Tails: Matt Tin	24PCS
5	InsertMolding	High Temperature Plastic	UL 94V-0 Black	1PCS
6	COVER	High Temperature Plastic	UL 94V-0 Black	1PCS

USB TYPE-C PIN ASSIGNMENTS

PIN NUMBER	SIGNAL NAME	PIN NUMBER	SIGNAL NAME
A1	GND	B12	GND
A2	TX1+	B11	RX1+
A3	TX1-	B10	RX1-
A4	VBUS	B9	VBUS
A5	CC1	B8	SBU2
A6	D+	B7	D-
A7	D-	B6	D+
A8	SBU1	B5	CC2
A9	VBUS	B4	VBUS
A10	RX2-	B3	TX2-
A11	RX2+	B2	TX2+
A12	GND	B1	GND

UNITS	SCALE	REV.	SHEET
MM	1:1	B3	1 OF 1

TOLERANCE

X. ±0.50	X.° ±2°
.X ±0.30	.X° ±1°
.XX ±0.10	.XX° ±0.5°
.XXX ±0.05	

DATE 2021.11.08

DR. Luoxi

CHK. Luoxi

APPD. Cailianlai

深圳市协新达科技有限公司
Shenzhen Xiexinda Technology Co.,Ltd

TITLE.
USB Type-C 24P-F立式贴片SMT H=13.0mm四脚无弹片

MAT'L SEE TABLE

FINISH SEE TABLE

DWG.NO. C

PART NO. /

SIZE A4

DO NOT SCALE DRAWING

THIS DRAWING CONTAINS INFORMATION THAT IS PROPRIETARY TO XIEXINDA TECHNOLOGY CO.,LTD.AND SHOULD NOT BE USED WITHOUT WRITTEN PERMISSION.

WEBSITE: WWW.XDCONN.CN