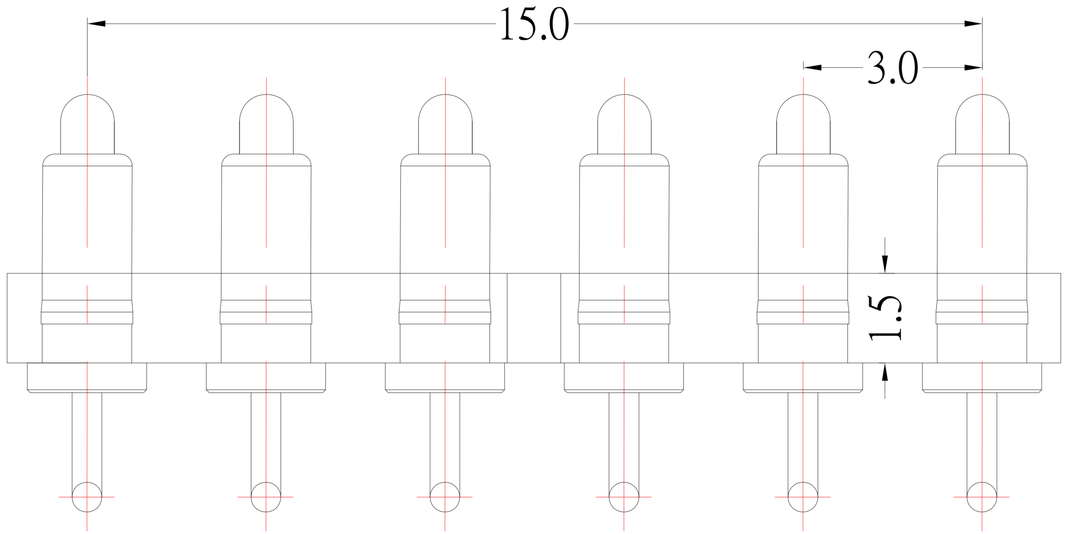

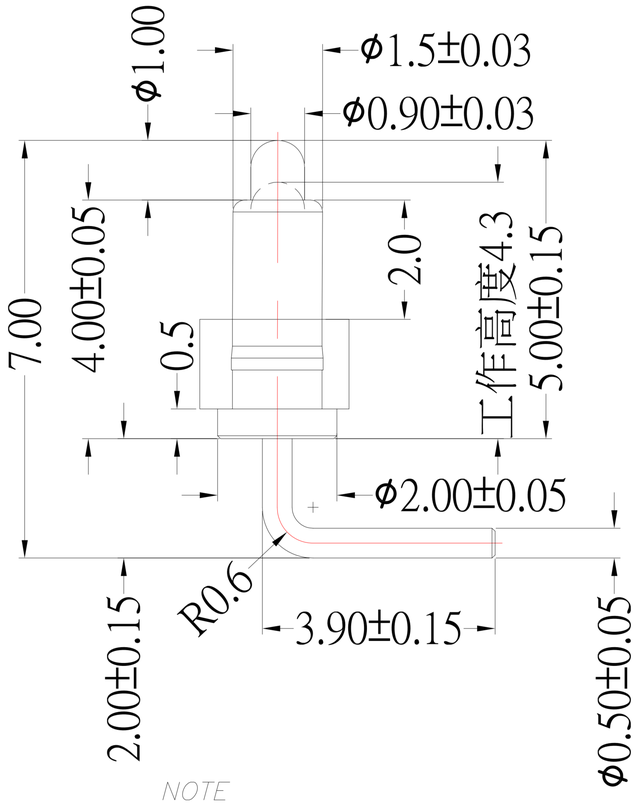

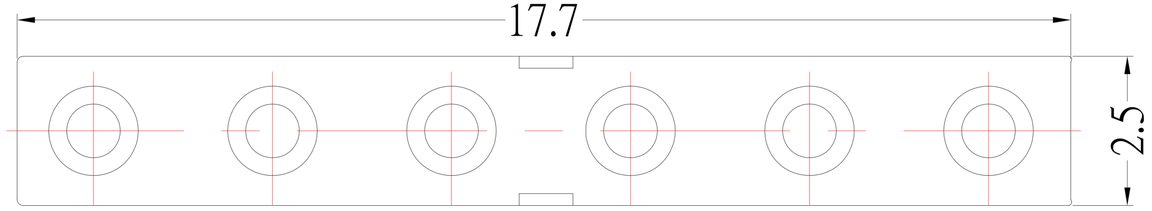

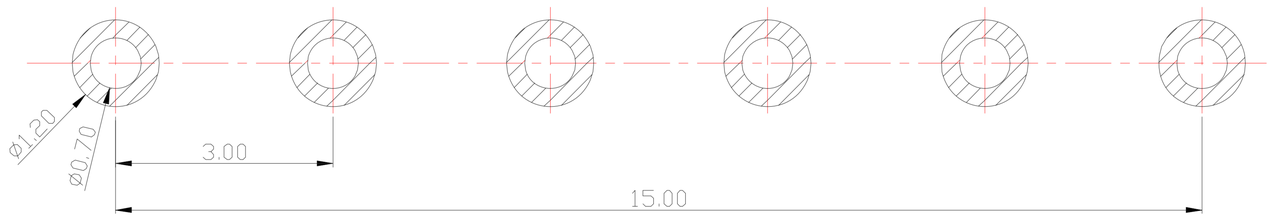

RECOMMEND PCB LAYOUT

NOTE

1.Material
- Plunger: Brass
- Barrel: Brass
- Spring: SUS
- Housing:PA46

2.Plating
- Plunger:Au over NI
- Barrel:Au over NI
- Spring:Au over NI

3.Electrical
- Rated current & voltage: DC 12V; 1.0A Max.

4.Mechanical
- Spring force: 70g±20% at normal working height
- Durability: 10,000 cycles(minimum)

5.To ensure the best usage,please operateit based on the working height Based on the engineering drawings,shall not exceed the maximum allowed compression

6.To avoid arcing issue, The adaptor startto power supply after connector mated fully.

ITEM NO.	DESCRIPTION	DRAWN	DATE
4	更新樣式	Lan	050919
3	新增PCB LAYOUT	Jack	011618
2	更新尺寸公差	Jack	011518
1	更新料號及圖面	Jack	122717

Switch Connector

东莞市溪榜电子有限公司
DONG GUAN XI BANG ELECTRONI CS CO., LTD.

TOLERANCE UNLESS OTHERWISE STATED :

Up to 5	±0.2
Above 5 ~ 15	±0.3
Above 15 ~ 30	±0.4
Above 30 ~ 50	±0.5
Angle	±0.3°

3RD. ANGEL'S

UNITS MM

DRAWN BY: Jack Lu	DATE 05/09/19	MAT'L	
CHECKED BY: Jacky Chen	DATE 05/09/19	FINISH	
APPROVED BY: Tony Kao	DATE 05/09/19	SCALE	1 : 1
		SHEET NO.	1 of 1

TITLE	CONNECTOR		
MODLE	POGO PIN		
DWG NO.	PGC-207010-6P-S353	SIZE	A4
PART NO.	PGC-207010-6P-S353	VER	R4