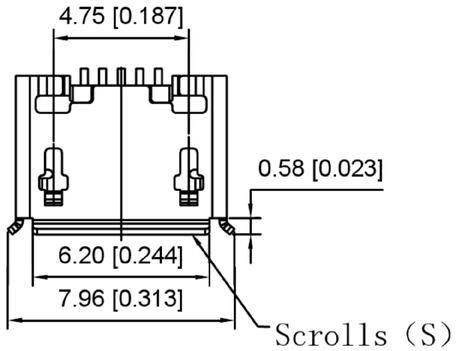


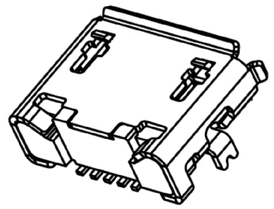

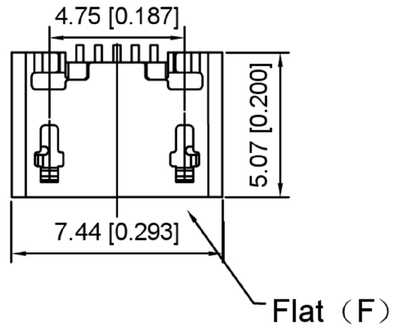


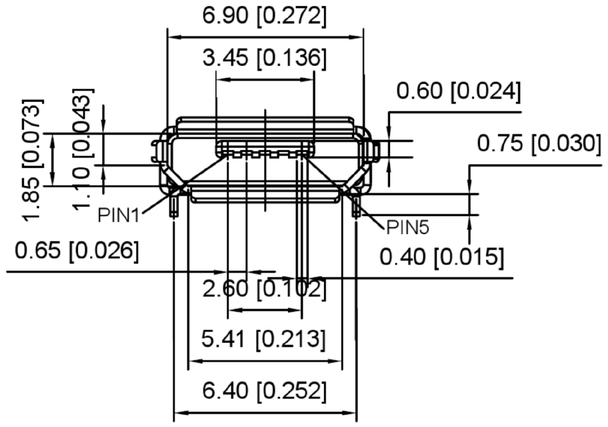


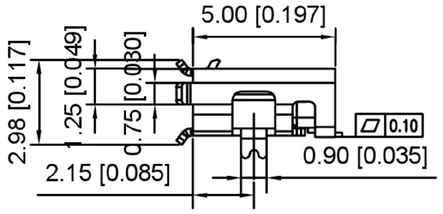


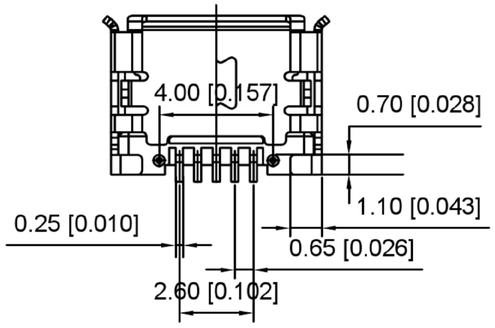


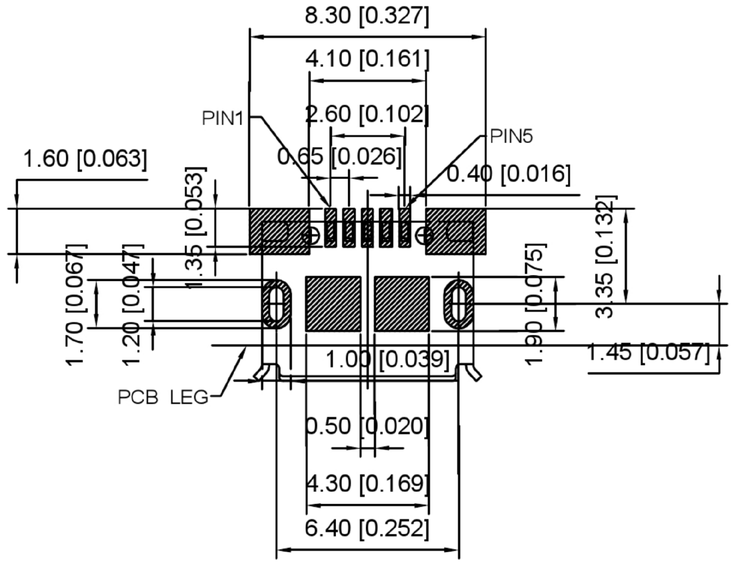


RECOMMENDED P.C.B. LAYOUT
TOP VIEW (TOLRANCE: ±0.05)

Material

Housing Material: LCP, UL94V-0, black

Contact Terminal: Copper Alloy

Metallic Shell: Sus

Electrical

Voltage Rating: 30 V AC

Current Rating: Signal (Pins 2,3,4): 1.0A, Power (Pins 1,5): 1.8A

Contact Resistance: 30mΩ Max

Insulation resistance: 1000MΩ Min

Dielectric withstanding voltage: 250V AC/Minute

Mechanical

Durability: 10,000 cycles

Mating Force: 35N (3.57Kgf) Max

Unmating Force: 8N (0.82Kgf) Min.

U254-05XX-4BH82-XXS

1:AU 1U"
6:AU 30U"
T:TIN
N:NICKEL

1:With 2:Without
S:Scrolls F:Flat

| | | | | | |
|---|---|---|---|---|---|
| | | | | ANGLAR | ±5° |
| | | | | L≤ 4 | ±0.2 |
| | | | | 4<L≤ 16 | ±0.3 |
| | | | | 16<L≤ 63 | ±0.4 |
| | DATE | REVISED | APPROVED | L> 63 | ±0.5 |
| REVISIONS | | | | UNSPECIFIED TOLERANCES | |

www.alpsr.com www.gdxjdz.com www.xbswitch.com

| | | | |
|---|---|---|---|
| DSND | | SCALE: N/A | MODEL TYPE: MICRO USB |
| DWN | | VIEW: | PART NO.: |
| CHKD | | UNIT: mm/in | DWG NO.: U254-05XX-4BH82-XXS |
| APPD | | SIZE: A4 | |

DONG GUAN XI BANG ELECTRONIC CO., LTD

| WEIGHT | SHEET | REVISION |
|---|---|---|
| | 1/1 | A0 |