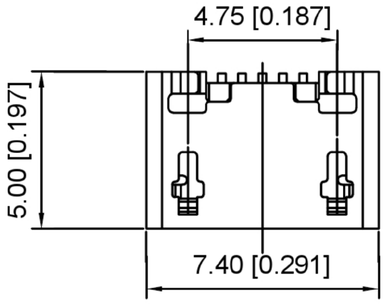

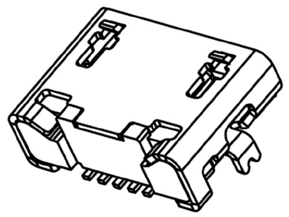

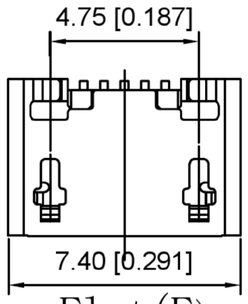

Flat (F)

Material

Housing Material: LCP, UL94V-0, black

Contact Terminal: Copper Alloy

Metallic Shell: Sus

Electrical

Voltage Rating: 30 V AC

Current Rating: Signal (Pins 2,3,4): 1.0A, Power (Pins 1,5): 1.8A

Contact Resistance: 30mΩ Max

Insulation resistance: 1000MΩ Min

Dielectric withstanding voltage: 250V AC/Minute

Mechanical

Durability: 10,000 cycles

Mating Force: 35N (3.57Kgf) Max

Unmating Force: 8N (0.82Kgf) Min.

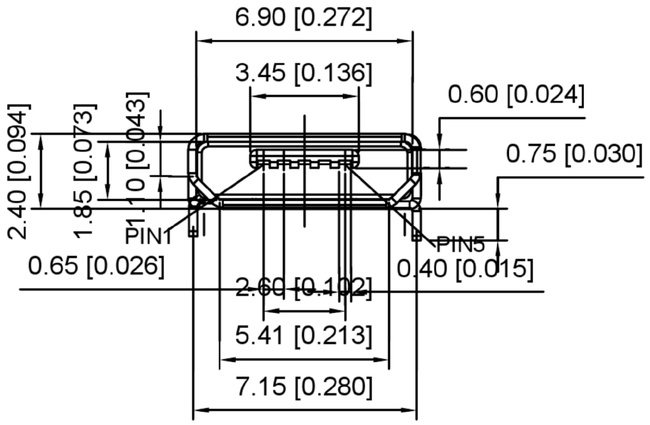

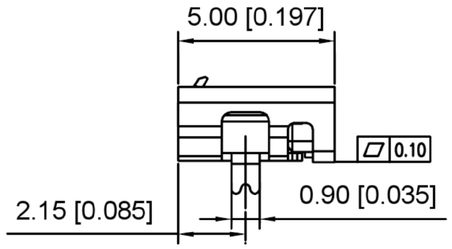

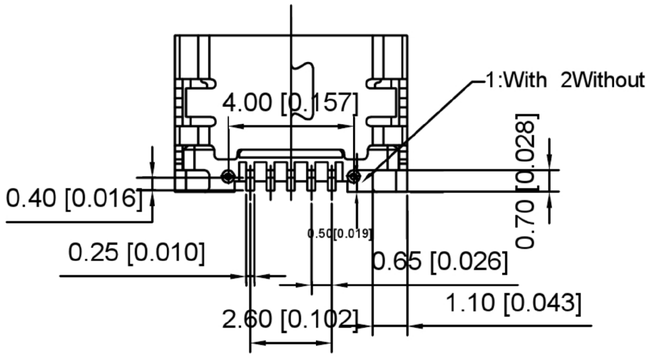

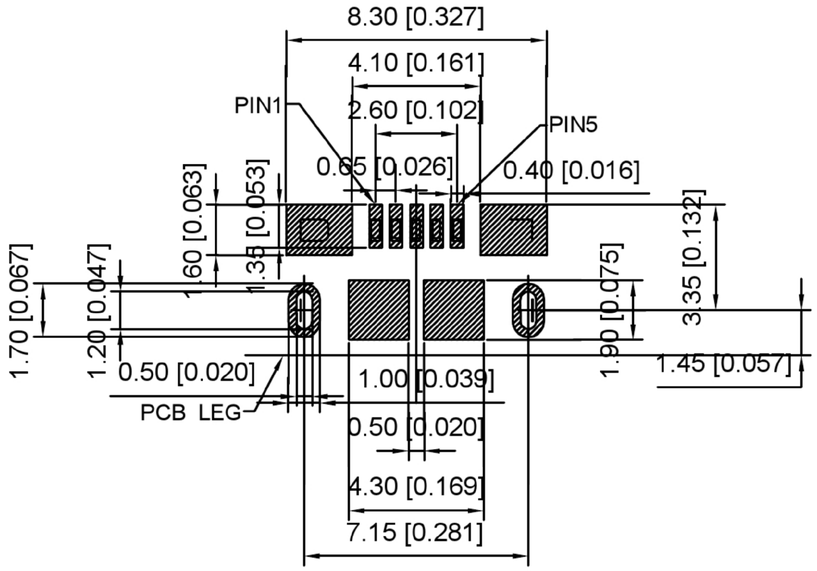

RECOMMENDED P.C.B. LAYOUT
TOP VIEW (TOLRANCE: ±0.05)

U254-05XX-4BH81-FXS

1:AU 1U"
6:AU 30U"

T:TIN
N:NICKEL

S:Sus
1:With 2:Without
S:Scrolls F:Flat

				ANGLAR	±5°
				L≤ 4	±0.2
				4<L≤ 16	±0.3
				16<L≤ 63	±0.4
	DATE	REVISED	APPROVED	L> 63	±0.5
REVISIONS				UNSPECIFIED TOLERANCES	

www.alpsr.com www.gdxjdz.com www.xbswitch.com

DSND		SCALE: N/A	MODEL TYPE: MICRO USB
DWN		VIEW:	PART NO.:
CHKD		UNIT: mm/in	DWG NO.: U254-05XX-4BH81-FXS
APPD		SIZE: A4	

DONG GUAN XI BANG ELECTRONIC CO., LTD

WEIGHT	SHEET	REVISION
	1/1	A0

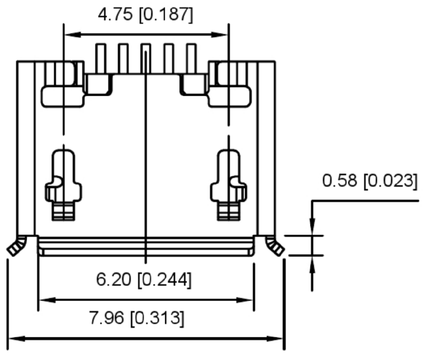

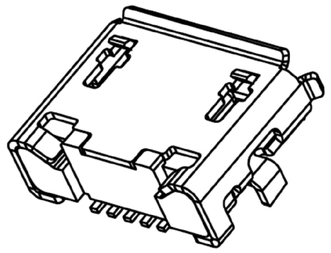

Material

Housing Material: LCP, UL94V-0, black

Contact Terminal: Copper Alloy

Metallic Shell: Sus

Electrical

Voltage Rating: 30 V AC

Current Rating: Signal (Pins 2,3,4): 1.0A, Power (Pins 1,5): 1.8A

Contact Resistance: 30mΩ Max

Insulation resistance: 1000MΩ Min

Dielectric withstanding voltage: 250V AC/Minute

Mechanical

Durability: 10,000 cycles

Mating Force: 35N (3.57Kgf) Max

Unmating Force: 8N (0.82Kgf) Min.

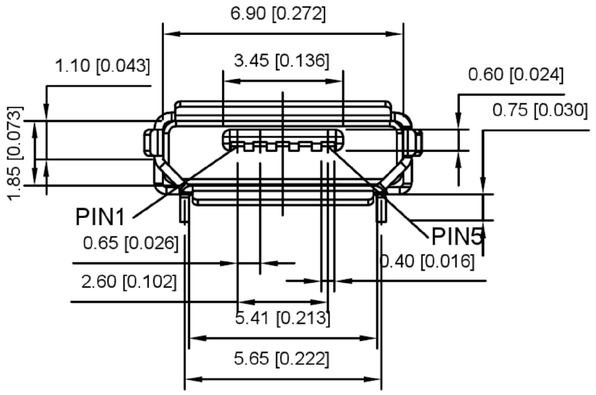

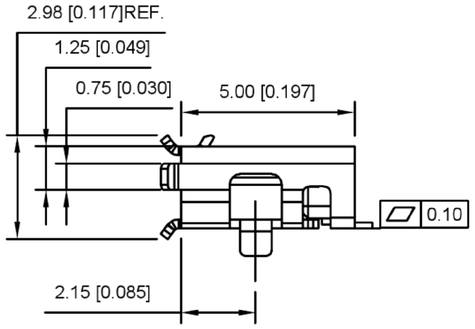

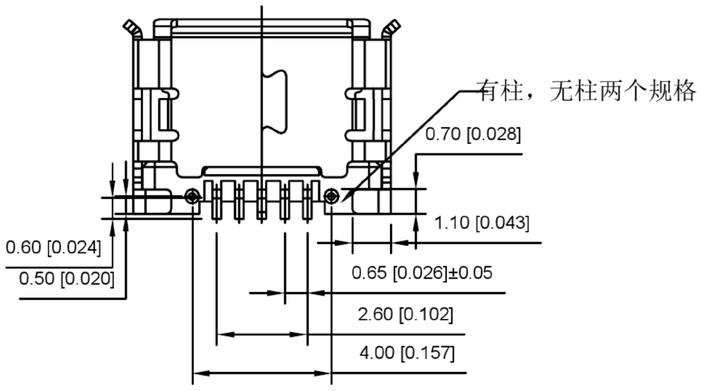

0.4

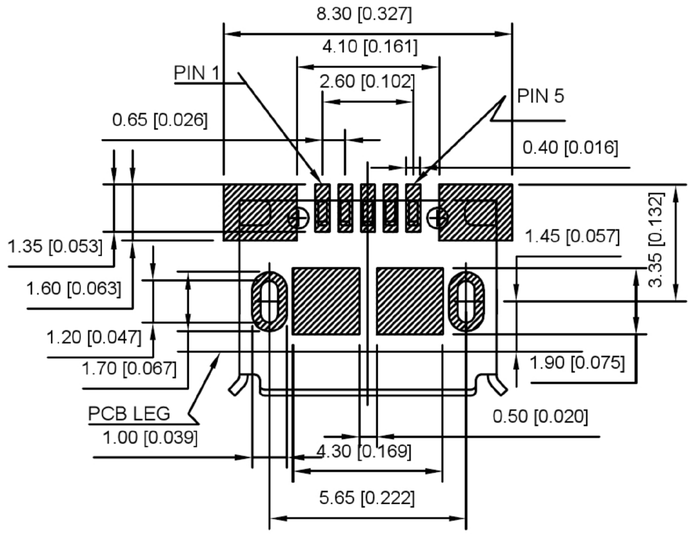

RECOMMENDED P.C.B. LAYOUT

TOP VIEW (TOLRANCE: ±0.05)

U254-05XX-4BH81-SXS

1:AU 1U"
6:AU 30U"

T:TIN
N:NICKEL

S:Sus
1:With 2:Without
S:Scrolls F:Flat

				ANGLAR	±5°
				L≤ 4	±0.2
				4<L≤ 16	±0.3
				16<L≤ 63	±0.4
	DATE	REVISED	APPROVED	L> 63	±0.5
REVISIONS				UNSPECIFIED TOLERANCES	

www.alpsr.com www.gdxjdz.com www.xbswitch.com

DSND		SCALE: N/A	MODEL TYPE: MICRO USB
DWN		VIEW:	PART NO.:
CHKD		UNIT: mm/in	
APPD		SIZE: A4	DWG NO.: U254-05XX-4BH81-SXS

DONG GUAN XI BANG ELECTRONIC CO., LTD

WEIGHT	SHEET	REVISION
	1/1	A0