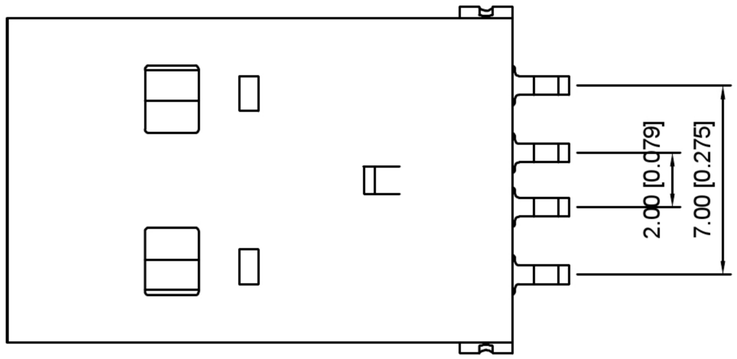

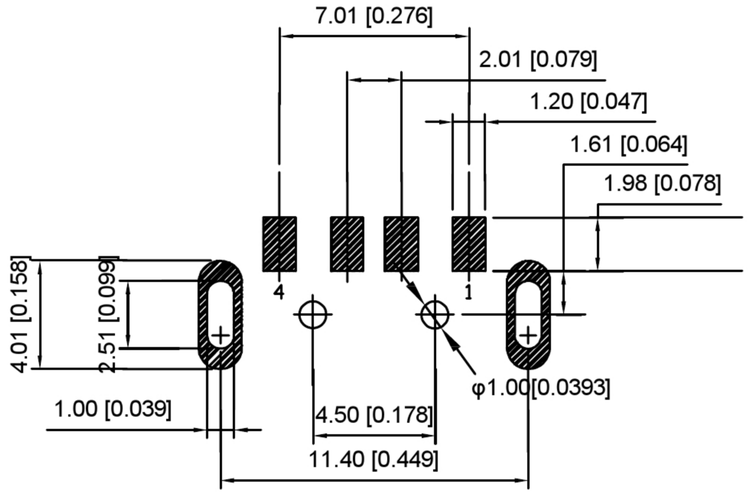

RECOMMENDED PCB LAYOUT

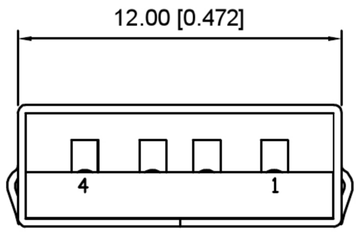

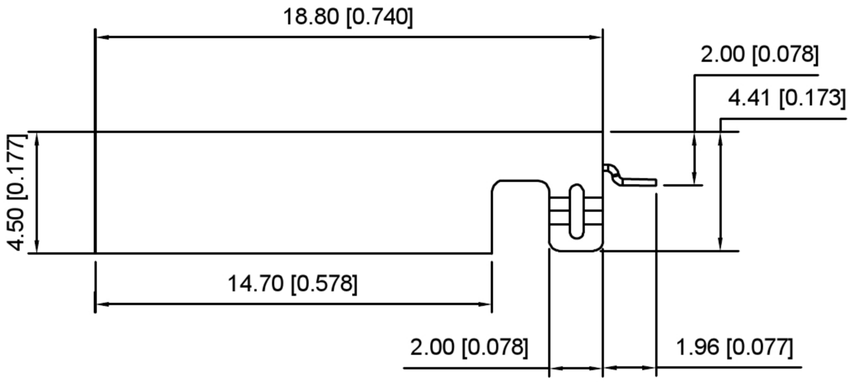

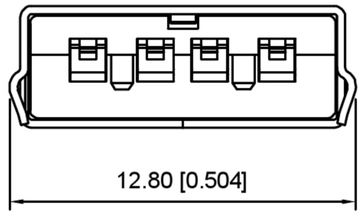

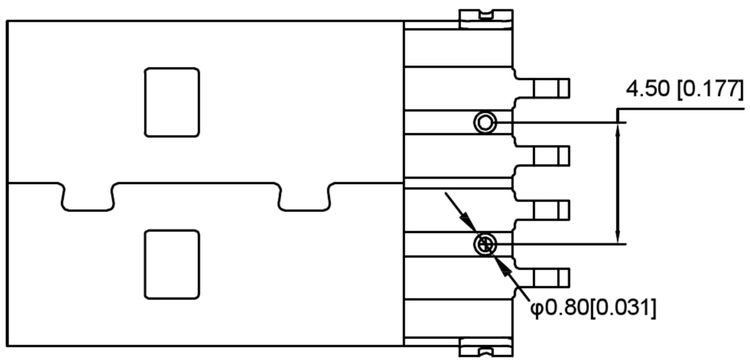

Housing Material: PBT UL94V-0, Temperature resistance shall not exceed 230 ℃, black/White。
Contact Terminal: Brass
Metallic Shell: Brass

U217-04XN-4XV81

1:Au 1U"
6:Au 30U"

T:TIN
N:NICKEL

W:WHITE
B:BLACK

1:LCP
2:PA6T
3:PA9T
4:PBT

				ANGLAR	±5°
				L≤ 4	±0.2
				4<L≤ 16	±0.3
				16<L≤ 63	±0.4
	DATE	REVISED	APPROVED	L> 63	±0.5
REVISIONS				UNSPECIFIED TOLERANCES	

www.alpsr.com www.gdxjdz.com www.xbswitch.com

DONG GUAN XI BANG ELECTRONIC CO., LTD

DSND		SCALE: N/A	MODEL TYPE: MINI USB
DWN		VIEW:	PART NO.:
CHKD		UNIT: mm/in	DWG NO.: U217-04XN-4XV81
APPD		SIZE: A4	

WEIGHT	SHEET	REVISION
	1/1	A0