CAD FILE:

ROHS

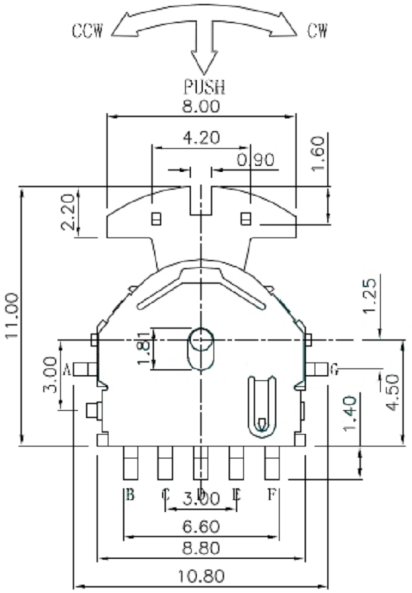

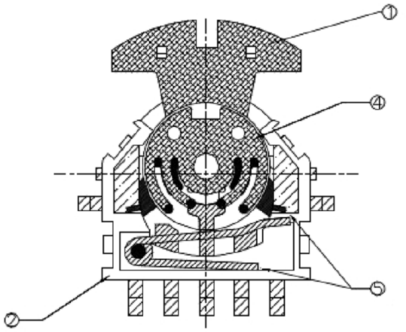

NOTE:
Operating Force:
lever portion 80 ± 15 gf
Push portion 205 ± 50 gf

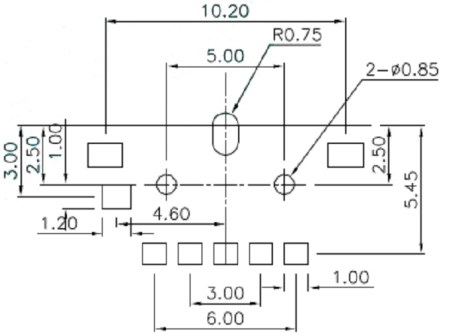

P.C.B Mounting
Pattern Dimension

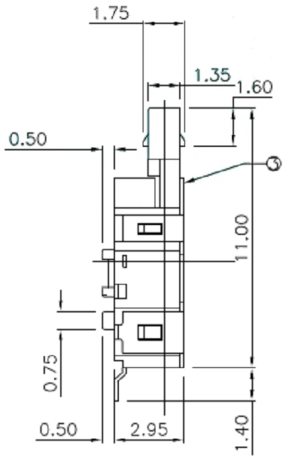

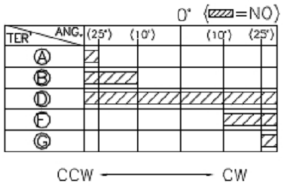

CODE TABLE

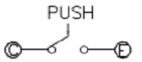

Circuit Diagram

NO.	PARTS	MATERIALS	Q'TY	FINISH
8				
7				
6				
5				
4	CONTACT	SUS	1	Ag CLAD
3	CASE	PPA/BRASS SRTIP	1	BLACK/Ag PLATED
2	COVER	STEEL STRIP	1	Ni PLATED
1	KNOB	PPA	1	BLACK

TOLERANCE UNLESS SPECIFIED
WITHIN 1.5mm : ±0.1mm
OVER 1.5mm : ±0.2mm

ISSUE	DATE	DESCRIPTIONS OF REVISION	APPD.
A	2012-9-25	初 版	ZENQ. CHEN

TITLE : Multi Function Switch
UNIT : mm
DRWG NO.: XB-TM-2301
MODEL: XB-TM-2301
SCALE: 5:1

DWN.	JUN. YANG	2012-9-25
CHK'D	DONG. PANG	2012-9-25
APPD.	ZENQ. CHEN	2012-9-25

东莞市溪榜电子有限公司
DONG GUAN XI BANG ELECTRONI CS CO., LTD.
Switch Connector