REV.	ECN. NO.	DESCRIPTION	ENG	DATE
A		INITIAL	Kai	2018.05.11
B		UPDATE VERSION	JEFF	2022.06.11

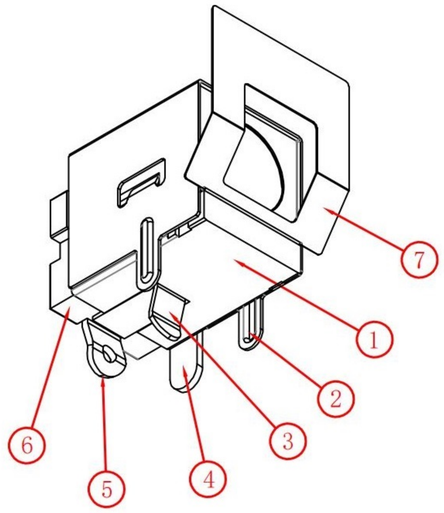

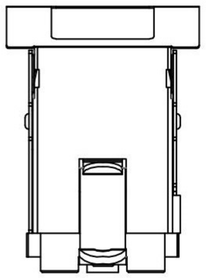

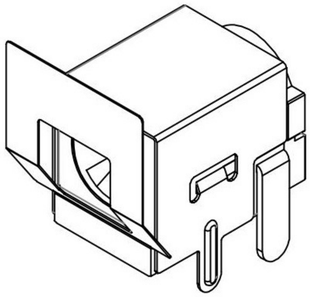

线路板开孔尺寸

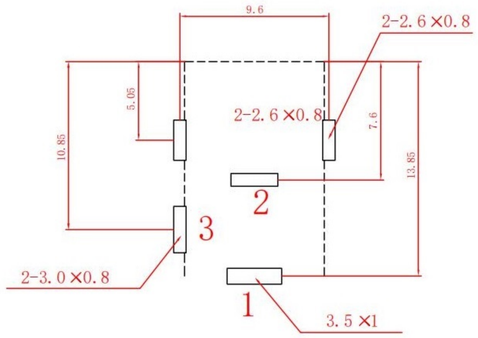

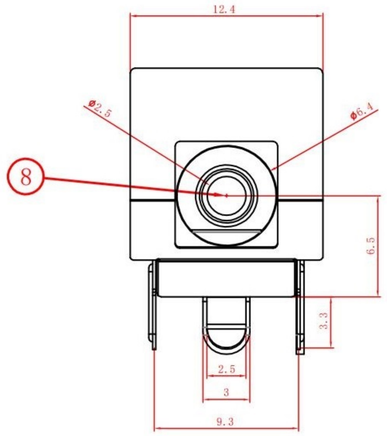

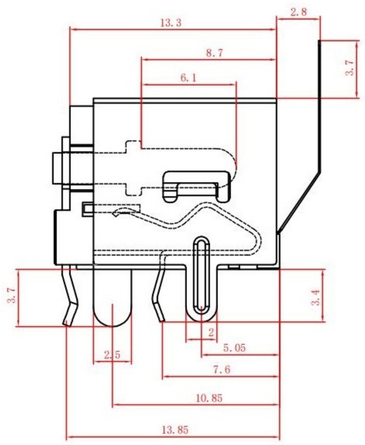

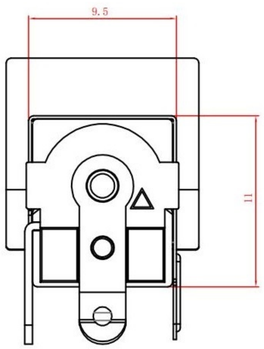

电路原理图

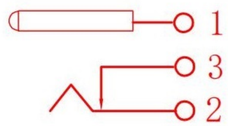

主要技术性能

1. 额定电负荷： 20V•5.5A;
2. 接 触 电 阻：≤0.03Ω;
3. 绝 缘 电 阻：≥100MΩ;
4. 耐 压：AC500V(50Hz)/min;
5. 插 入 力：24.5 N max;
5. 插 拔 力：3.92-24.5N;
6. 寿 命：5,000次。

ITEM	NAME	Q'TY	DESCRIPTION	NOTE
3	CENTER PIN	1	BRASS;THE BOTTOM OF THE NICKEL; THE WHOLE GOLD PLATING.	
2	SHELL	1	PHOSPHOR BRONZE; THE BOTTOM OF THE NICKEL; THE WHOLE GOLD PLATING.	T=0.2
1	HOUSING	1	HIGH TEMPERATURE;COLOR BLACK	

MEASURE POINT:
QUADRANT POINT (QP)
TANGERCY POINT (TP)
INTERSECTION POINT (IP)

UNLESS OTHERWISE SPECIFIED, TOLERANCE:

X.	±0.50
X.x	±0.30
X.xx	±0.20
X.xxx	±0.10
ANGULAR	±3°

东莞市溪榜电子有限公司
DONG GUAN XI BANG ELECTRONI CS CO., LTD.

DESIGN:	DATE:	TITLE: DC POWER JACK CONNECTOR	
CHECKED:	DATE:		
APPROVED:	DATE:		
PART NO. XB-DC-005H		REV.: B	SCALE: 1:1	UNIT: mm
DRAWING NO.		SIZE: A4	SHEET: 1/1	