REV	DESCRIPTION	DRW	DATE
A	NEW	LI LI	2022-11-29

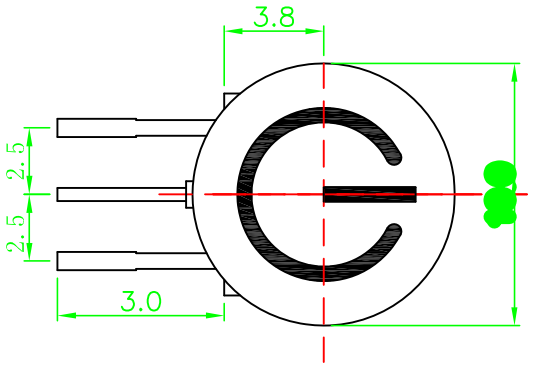

P.C.B LAYOUT

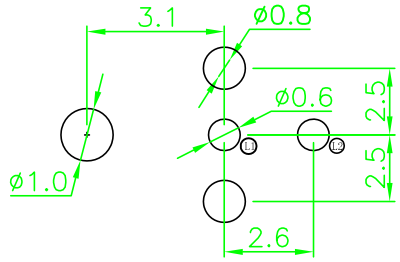

CIRCUIT

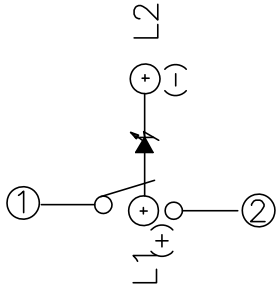

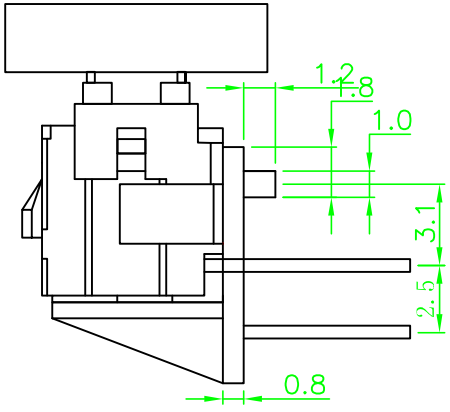

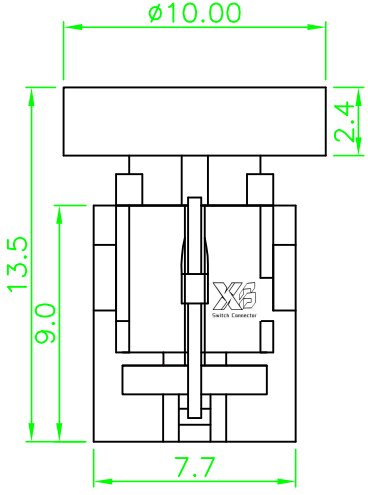

NOTES:
1.RATING: 12VDC 50mA
2.CONTACT RESISTANCE: 100mΩ Max
3.INSULATION RESISTANCE: 100MΩ 250VDC FOR 1MIN
4.DIELECTRIC STRENGTH: 250VAC(50/60Hz) FOR1MIN
5.LIFE TEST:100,000 CYCLES
6.OPERATION FORCE&TRAVEL: SEE SPECIFICATION

NO.	PART NAME	MATERIAL
6	LED	BRONZE PLATED SILVER
5	COVER	PC/PET
4	PUSH BUTTON	PA66
3	SPRING PLATE	PBS SILVER CLAD
2	CASE	PA66
1	TERMINAL	SILVER PLATED BRONZE

东莞市溪榜电子有限公司
DONG GUAN XI BANG ELECTRONI CS CO., LTD.

LED COLOR									
1	3	4	5	6	7	13	14	16	57
Red	Green	Blue	White	Pure Green	Orange	Red Green	Red Blue	Red PureGreen	Blue Orange

TOLERANCE				PART NO.:		TITLE	TACT SWITCH
UNLESS OTHERWISE STATED				带灯开关			
X.X	±0.25	∠	±0.5°	DRAWN LI LI	DATE 2012.05.16	MODEL	XB-TS-LED-107Im10d-xx_new
X.XX	±0.1	UNIT	mm			MATL	
REV	A	SCALE	4:1	CHK'D Wang	DATE 2012.05.16	FINISH	
SIZE	A4	SHEET	1 OF 1				