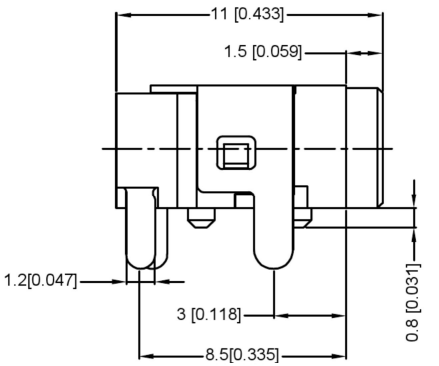

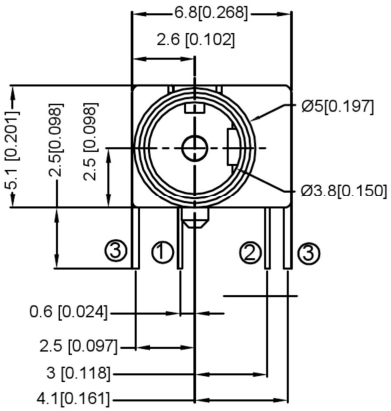

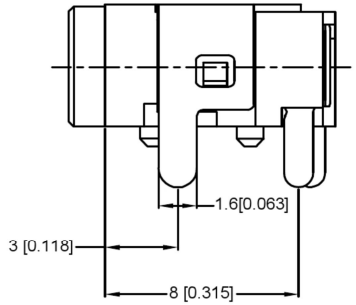

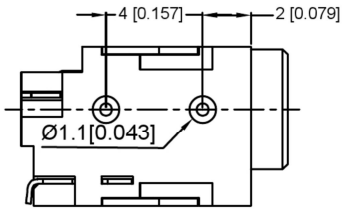

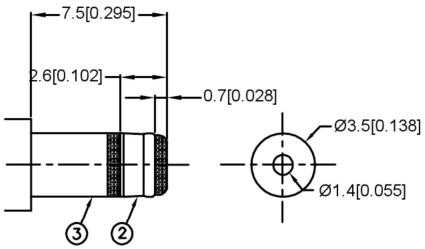

SCHEMATIC	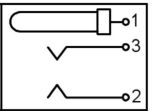
Model	DC-0310
Center Pin	Ø1.0 mm
	Ø1.3 mm

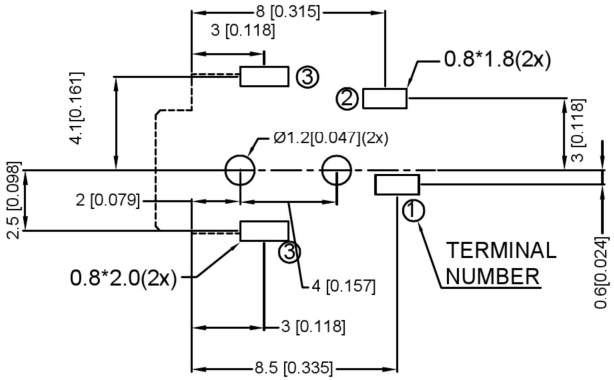

PCB LAYOUT
(BOTTOM VIEW)

	MATERIAL	PLATING
axis support	Brass	tin
center pin	Brass	tin
plastic	Pbt	
terminal 1	Brass	tin
terminal 2	Phosphor Bronze	tin
terminal 3	Brass	tin

				ANGLAR	±5°
				L≤ 4	±0.2
				4<L≤ 16	±0.3
				16<L≤ 63	±0.4
	DATE	REVISED	APPROVED	L> 63	±0.5
REVISIONS				UNSPECIFIED TOLERANCES	

www.alpsr.com www.gdxjdz.com www.xbswitch.com

DONG GUAN XI BANG ELECTRONIC CO., LTD

DSND		SCALE: N/A	MODEL TYPE: DC POWER JACK
DWN		VIEW:	PART NO.: DC-0310-1.3
CHKD		UNIT: mm/in	DWG NO.:
APPD		SIZE: A4	

WEIGHT	SHEET	REVISION
	1/1	A0