REV.	DESCRIPTION	APPROVED	DATE

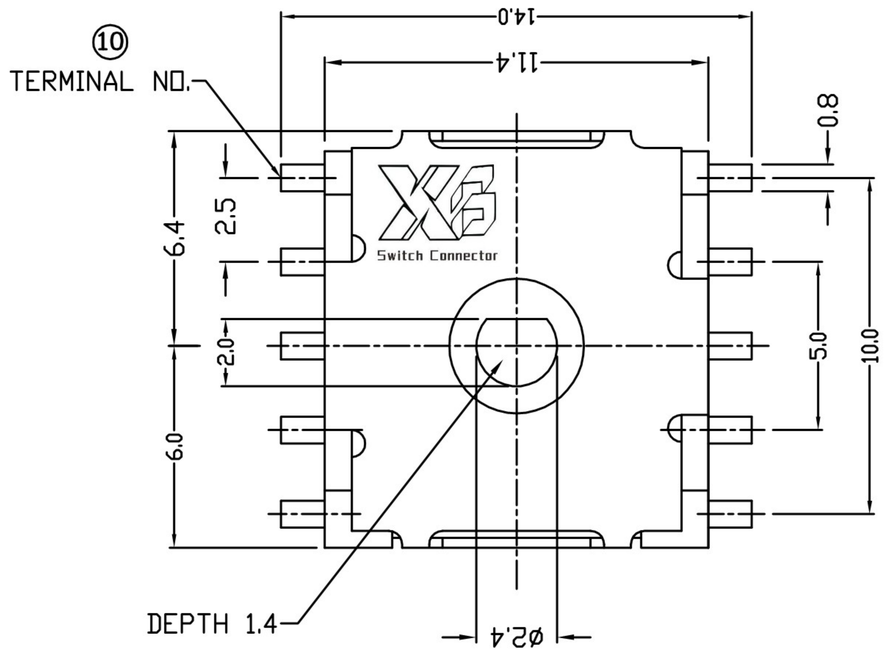

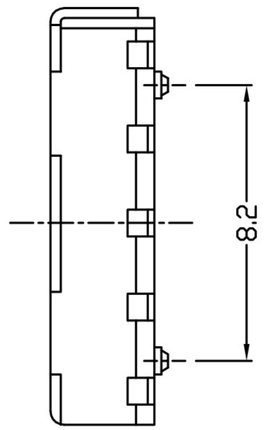

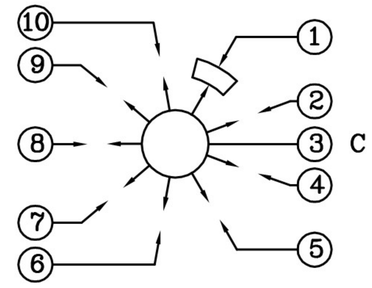

CIRCUIT DIAGRAM

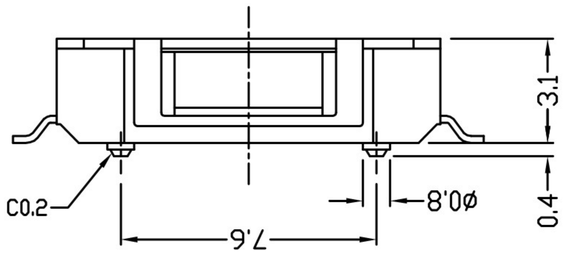

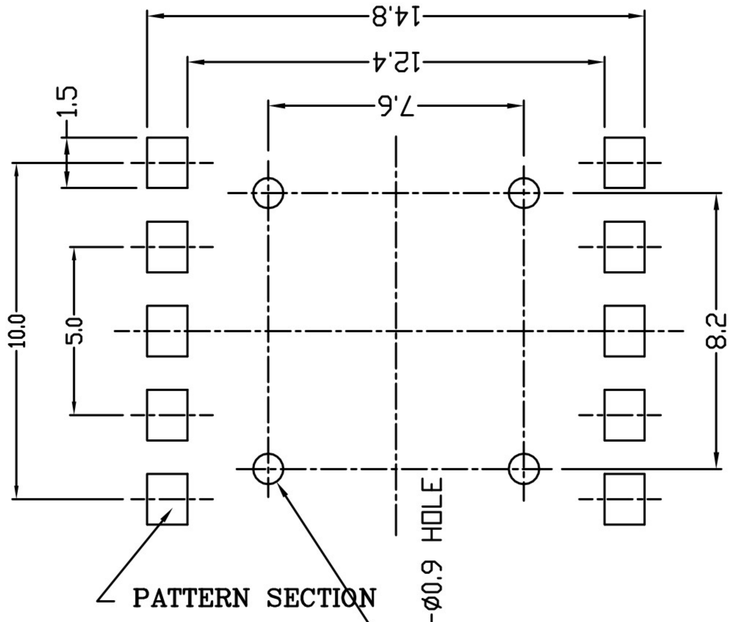

P.C.BOARD LAYOUT

NO.	PART NAME	MATERIAL	QTY.	FINISHING
5	CONTACT SPRING	PHOSPHOR BRONZE	1	Ag PLATED
4	TERMINAL	BRASS	9	Ag PLATED
3	HOUSING	PA46	1	BLACK
2	METAL COVER	STANLESS STEEL	1	NATURAL
1	ACTUATOR	PA46	1	ORANGE

TOLERANCES UNLESS OTHERWISE STATED

DIMENSIONAL	±0.2
ANGULAR	±3°

PROJECTION

DO NOT SCALE THIS DRAWING

DRAWN	CHECKED	APPROVED
G. D. T		
NOV-11/2007		

东莞市溪榜电子有限公司
DONG GUAN XI BANG ELECTRONI CS CO., LTD.

TITLE	9POSITION LOW-PROFILE VERTICAL TYPE ROTARY SWITCH
MODEL	XB-XZ-108N
P/N	
DATE	2007-NOV-11

UNIT : MM	REV.: A	SCALE : 4 :1	SIZE : A4