ROHS

版 本 REV	修正标记 REV.LTR	修正前 BEFORE REVISION	修正后 AFTER REVISION	签 名 SIGN	日 期 DATE
V1.0		新版制定		June	20180917

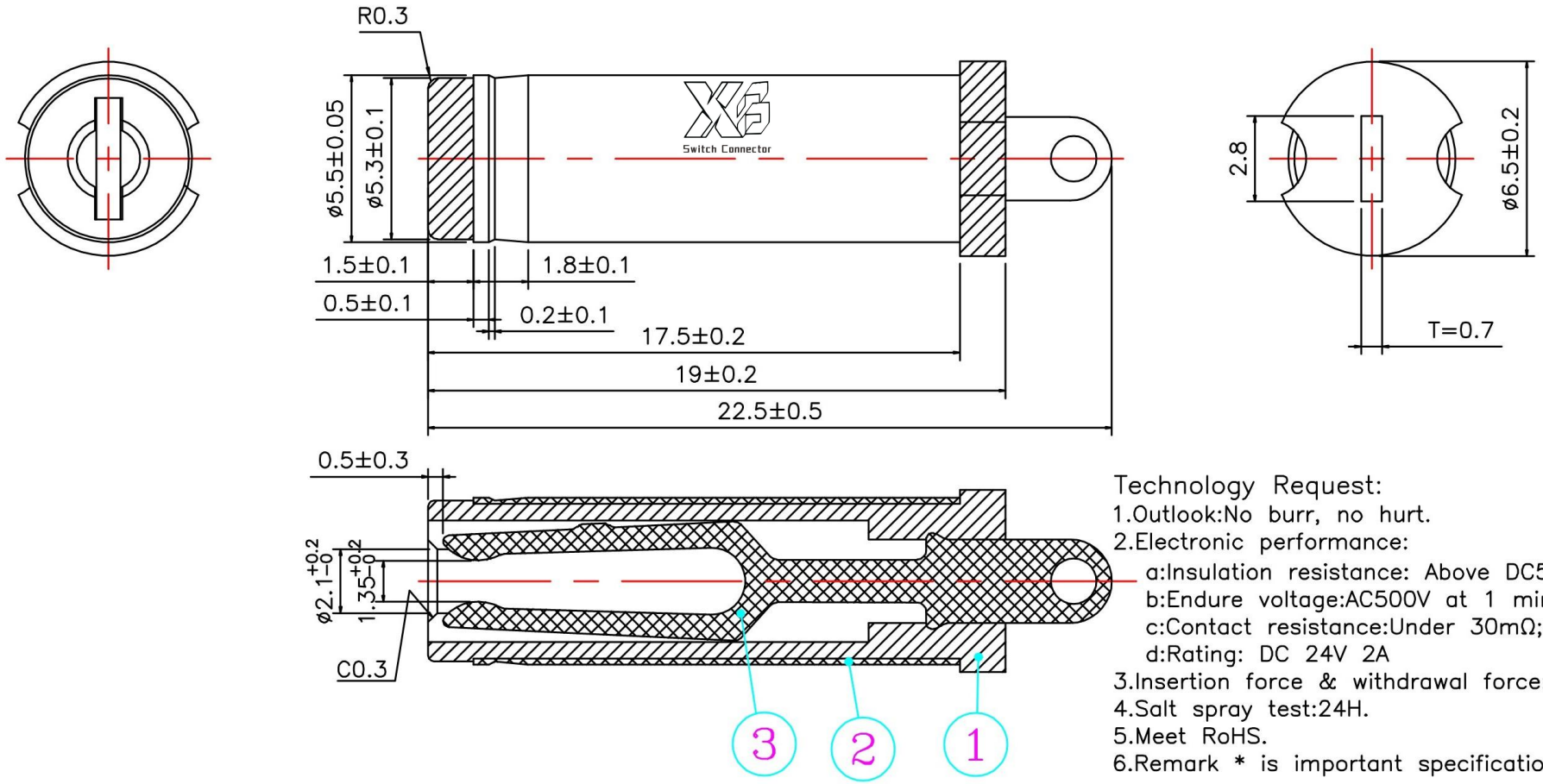

Technology Request:
1.Outlook:No burr, no hurt.
2.Electronic performance:
a:Insulation resistance: Above DC500V/100MΩ;
b:Endure voltage:AC500V at 1 minute;
c:Contact resistance:Under 30mΩ;
d:Rating: DC 24V 2A
3.Insertion force & withdrawal force:0.3–3kgf.
4.Salt spray test:24H.
5.Meet RoHS.
6.Remark * is important specification.

单位 Unit	mm	一般公差 The general tolerance	NO.	PART	MATERIAL	PLATING
比例 Scale	5:1	xx.:±0.3	7			
视 图 Third angle projection		x.x:±0.1	6			
		.xx:±0.05	5			
			4			
			3	5521*22音叉片	C5191	Ni 1–3um
			2	5.48*16车沟管	H65	Ni 1–3um
			1	PLASTIC	PBT	BLACK

核准 APPROVED BY	校对 CHECKED BY	制图 DRAWN BY
June	杨义邦	李莹峰

东莞市溪榜电子有限公司
DONG GUAN XI BANG ELECTRONI CS CO., LTD.

规 格 DESCRIPTION:	DC PLUG ø5.5*ø2.1*22.5
品 名 P/N:	XB-5521TV225
图 号 DRAWN NO:	