ROHS

| 版 本 REV | 修正标记 REV.LTR | 修正前 BEFORE REVISION | 修正后 AFTER REVISION | 签 名 SIGN | 日 期 DATE |
|---|---|---|---|---|---|
| V1.0 | | 新版制定 | | June | 20180917 |
| | | | | | |

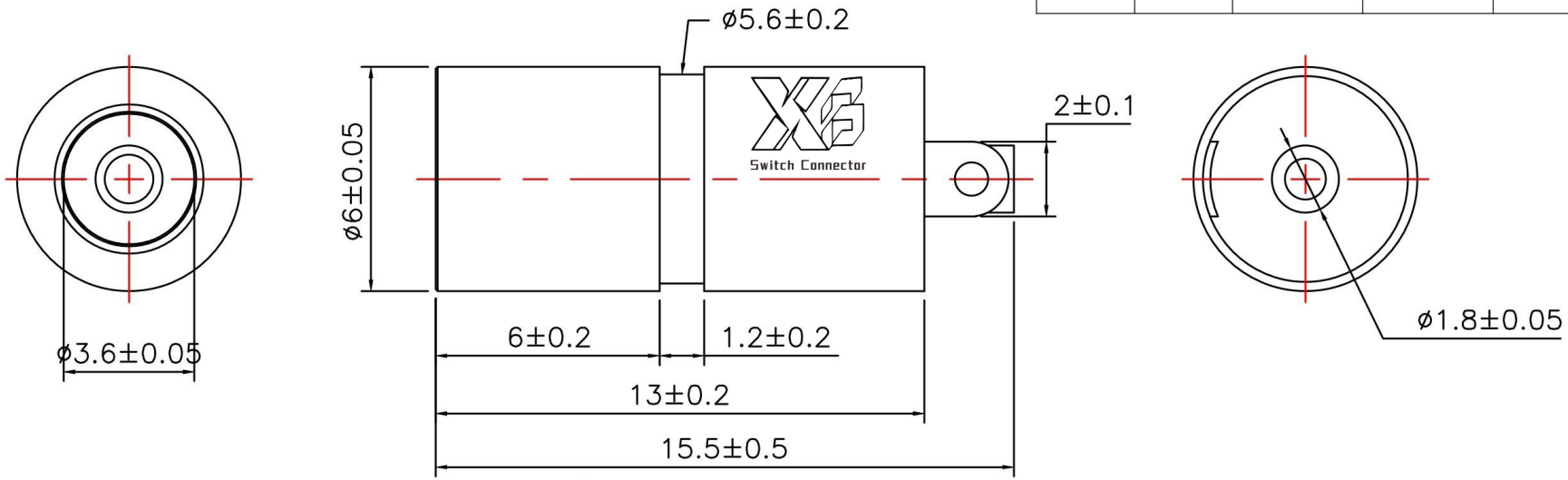


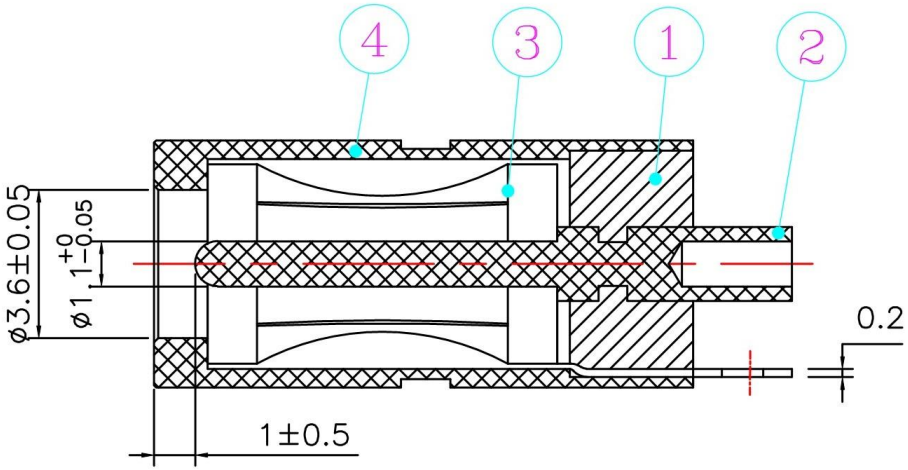


Technology Request:
1.Outlook:
No burr, no hurt.
2.Electronic performance:
a:Insulation resistance:
Above DC500V/100MΩ;
b:Endure voltage:
AC500V at 1 minute;
c:Contact resistance:
Under 30mΩ;
3.Insertion force & withdrawal force:
0.3−3kgf.
4.Salt spray test:24H.
5.Meet RoHS.
6.Remark * is important specification.

| 单位 Unit | mm | 一般公差 The general tolerance | NO. | PART | MATERIAL | PLATING |
|---|---|---|---|---|---|---|
| | | | 7 | | | |
| | | | 6 | | | |
| | | | 5 | | | |
| 比例 Scale | 5:1 | xx.:±0.3 | 4 | 6*13*3.6管 | C3604 | Ni 1~3um |
| 视 图 Third angle projection | | x.x:±0.1 | 3 | 4.8*14带尾弹圈 | C5191 | Ni 1~3um |
| | | | 2 | 1.06*1.8*14.5针 | C3604 | Ni 1~3um |
| | | .xx:±0.05 | 1 | PLASTIC | PBT | BLACK |

| 核准 APPROVED BY | 校对 CHECKED BY | 制图 DRAWN BY |
|---|---|---|
| June | 杨义邦 | 李莹峰 |

东莞市溪榜电子有限公司
DONG GUAN XI BANG ELECTRONI CS CO., LTD.
Switch Connector

| | |
|---|---|
| 规 格 DESCRIPTION: | DC JACK ø3.5*1.1*15.5 |
| 品 名 P/N: | XB-3511JL60平胶 |
| 图 号 DRAWN NO: | |