REV.	ECN NO.	DESCRIPTION	DESIGN	DATE
A		INITIAL	Kai	2018.05.11

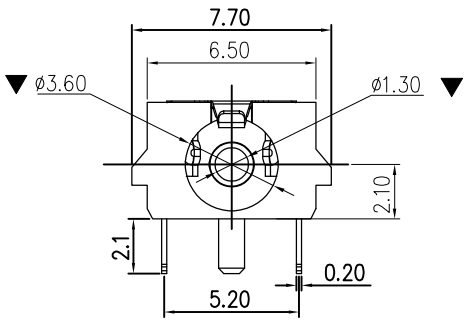

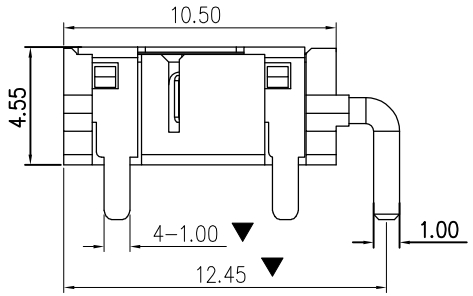

SPECIFICATIONS:

1. ELECTRICAL CHARACTERISTICS:
   - 1-1. RATING: 24V 3A
   - 1-2. CONTACT RESISTANCE: 50mΩ MAX.(INITIAL)
   - 1-3. DIELECTRIC WITHSTANDING VOLTAGE: 500V AC FOR ONE MINUTE
   - 1-4. INSULATION RESISTANCE: 100M MIN. MEASURED BY 500V DC
2. MECHANICAL CHARACTERISTICS:
   - 2-1. INSERTION FORCE : 0.3~3.0 KGF
   - 2-2. WITHDRAWAL FORCE : 0.3~3.0 KGF
3. LIFE TEST: 5,000 CYCLES MIN.

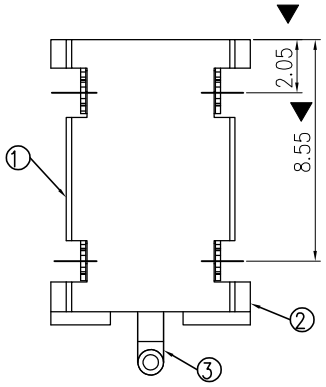

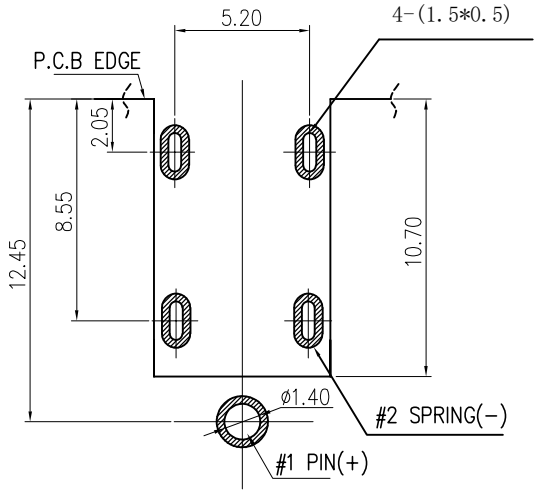

RECOMMENDED PCB LAYOUT
TOP VIEW (TOLERANCE:±0.05)

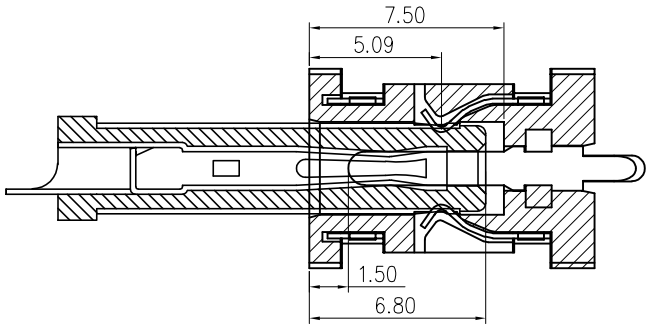

DC JACK INSERT DEPTH

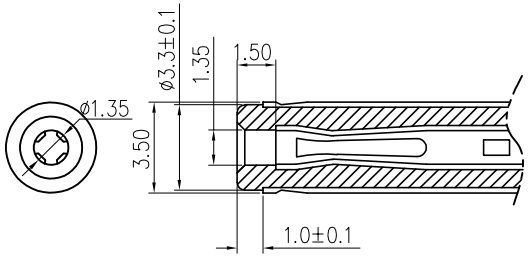

MATE PLUG

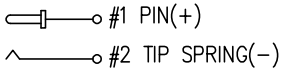

ELECTRICAL CIRCUIT

ITEM	NAME	Q'TY	DESCRIPTION	NOTE
3	SHELL	1	COPPER ALLOY; THE BOTTOM OF THE NICKEL; THE WHOLE GOLD FLASH PLATING.	
2	CONCTOR PIN	1	COPPER ALLOY; THE BOTTOM OF THE NICKEL; THE WHOLE GOLD FLASH PLATING.	
1	HOUSING	1	HIGHT TEMPERATURE PLASTIC	

UNLESS OTHERWISE SPECIFED TOLERANCES

DECIMALS: DIM	TOL	ANGLES: DIM	TOL
X.	±0.50	X.	±2°
X.X	±0.30	X.X	±1°
X.XX	±0.20	X.XX	
X.XXX	±0.10	X.XXX	

东莞市溪榜电子有限公司
DONG GUAN XI BANG ELECTRONI CS CO., LTD.

DWG NO.	Q/XM-CP-RD-0125	PART NAME:	DC电源插座
DESIGN:		PART NO.	XB-DCJR0021-F02G1ER-A
CHECK:		REV. A	UNIT: mm / SHEET: 1/1
APPROVED			