REV	ECN #	DESCRIPTION	DRAWING	APPROVED	DATE
A		NEW RELEASE	JIANG		2018/07/19

Pb Process Capable — RoHS Compliant 2002/95/EC

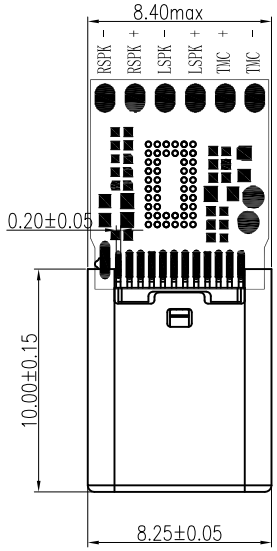

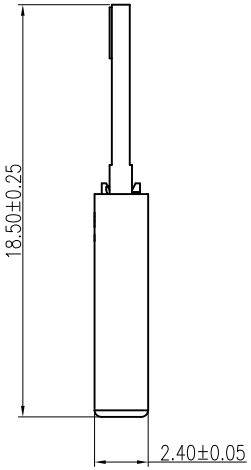

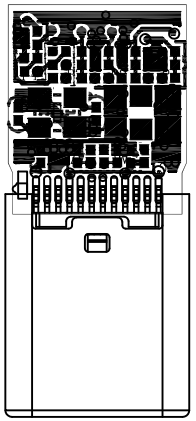

PRODUCT NO.

PATC01-24 C X XX XX-XX
① ② ③④⑤ ⑥ ⑦

① PRODUCT SERIES:
PATC01: USB TYEP_C PLUG WITH PCB
② PIN NO.:
24: 24PIN
③ HOUSING MATERIAL:
C: LCP
④ COLOR:
B:BLACK
W:WHITH
⑤ FINISHING:
15:Au30U″,Sn100U″
16:Au5U″,Sn100U″
05:Au1U″,Sn100U″
⑥ SERIES NO.:
00:WITHOUT SPRING
03:WITH SPRING
⑦ PCB TYPE:
07:音频板IC BES3100-S BGA48

NOTES:

1.MATERIAL
1.1.HSG: HIGH TEMPERATURE THERMOPLASTIC UL94V-0 BLACK;
1.2.CONTACT: COPPER ALLOY
1.3.LATCH: STAINLESS STEEL
1.4.EMI SPRING: STAINLESS STEEL
1.5.SHELL: STEEL

2. FINISH:
2.1 CONTACT:
0.762um [30u″] MIN, Au PLATING ON CONTACT AREA.
2.54um [100u″] MIN. TIN PLATING ON SOLDERTAIL AREA.
1.27um [50u″] MIN.NICKEL.UNDERPLATING ON ALLOVER AREA.
2.2 SHELL
Ni PLATING OVERALL
2.3 LATCH:
2.54um [100u″] MIN. TIN PLATING ON SOLDERTAIL AREA.
1.27um [50u″] MIN.NICKEL.UNDERPLATING ON ALLOVER AREA.

3.ELECTRICAL CHARCTERISTICS:
3.1 CONTACT RESISTANCE: 40mΩ MAX.(INITIAL)
3.2 INSULATION RESISTANCE: 100MΩ MIN.
3.3 DIELECTIC WITHSTANDING VOLTAGE: 100V AC FOR 1 MINUTE.

4.MECHANICAL CHARACTERISTICS:
4.1 INSERTION FORCE: 0.5~2.0KG(5N~20N).
4.2 WITHDRWAL FORCE: 0.8~2.0KG(8N~20N)
4.3 DURABILITY:10000 CYCLES

5.ENVIRONMENTAL CHARACTERISTICS:
5.1 OPERATING TEMPERATURE: -30° TO +85°
5.2 STORAGE TEMPERATURE: -40° TO +85°

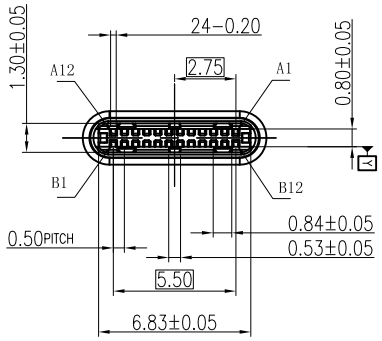

CONTACT PIN ASSIGNMENT:

PIN	SIGNAL NAME	SIGNAL NAME	PIN
A1	GND	GND	B12
A2	TX1 +	RX2 +	B11
A3	TX1 −	RX2 −	B10
A4	V_{BUS}	VBUS	B9
A5	CC1	SBU2	B8
A6	Dp1	Dn2	B7
A7	Dn1	DP2	B6
A8	SBU1	CC2	B5
A9	VBUS	VBUS	B4
A10	RX2 −	TX2 −	B3
A11	RX2 +	TX2 +	B2
A12	GND	GND	B1

CUSTOMER DRAWING

GENERAL TOLERANCE
X.
.X ±0.20
.XX ±0.15
.XXX ±0.10

ANGEL TOLERANCE
X. ±3°
.XX ±2°
.XXX ±1°

东莞市溪榜电子有限公司
DONG GUAN XI BANG ELECTRONI CS CO., LTD.

DRAWING	JIANG	TITLE:	USB TYPE C PLUG 24Pin ASSY 音频板带IC
APPROVED		P/N:	XB-PATC01-24CB1603-07
DATE	2018.07.20	DRAWING NO.	C-PATC01-07

UNIT mm | SCALE 1:1 | SIZE A4 | SHEET 1of1 | REV A